NATO Explosive Ordnance Disposal
Centre of Excellence - Slovak Republic

FORMER WARSAW PACT AMMUNITION HANDBOOK

VOLUME 2
Land Forces Ammunition
–
Rockets and Missiles

TRENČÍN 2015

For Official Use Only

FORMER WARSAW PACT AMMUNITION HANDBOOK

VOLUME 2
Land Forces Ammunition

–

Rockets and Missiles

The NATO Explosive Ordnance Centre of Excellence (NATO EOD COE) supports the efforts of the Alliance in the areas of training and education, information sharing, doctrine development and concepts validation.

Published by

NATO EOD Centre of Excellence

Ivana Olbrachta 5, 911 01 Trenčín, Slovak Republic

Tel. + 421 333 502, Fax + 421 960 333 504

www.eodcoe.org

A Book of Papers – Former Warsaw Pact Ammunition Handbook VOL 2

ISBN 978-80-89261-58-1

© EOD Centre of Excellence. All rights reserved
2015

No part of this book may be used or reproduced in any manner without the written permission of the publisher, except in the case brief quotations embodied in articles and reviews.

Even though in areas of current NATO operations the insurgency is mainly using the Home Made Explosive as the main charge for emplaced IEDs, our EOD troops have to cope with the use of the conventional ammunition in any form and size all around the world. To assist in saving EOD Operators' lives and to improve their effectiveness at ammunition disposal, it is essential to possess the adequate level of experience and knowledge about the respective type of ammunition. The identified information gap on conventional ammunition produced in the past in Former Warsaw Pact countries has led the NATO EOD Centre of Excellence to develop a product enabling mitigation of this shortfall.

You are about to start using the NATO EOD Centre of Excellence's Handbook on Former Warsaw Pact Ammunition that is meant to effectively assist NATO and Partner Nations' Staff Officers and NCOs at the battalion and brigade levels by providing a ready reference and guidance for Ammunition Technicians, EOD Troops and Combat Engineers dealing with the conventional ammunition. Its aim is simply to assist in understanding of the construction of this type of ammunition and its safe disposal. The leading motive of this handbook is a large number of this ammunition kind still used all around the world.

This Edition is not to be considered as an end product. My team will improve its content by adding more information to the next issue to better support our EOD troops' daily endeavor.

Director, NATO EOD Centre of Excellence

TABLE OF CONTENTS

INTRODUCTION 0-1

CHAPTER 1 1-1
CLASSIFICATION OF ROCKETS AND MISSILES

0101. BASIC DEFINITION 1-1
0102. CLASIFICATION OF ROCKETS AND MISSILES 1-1
0103. ROCKET WITH ROCKET MOTOR 1-2
0104. ROCKET WITH ROCKET ENGINE 1-3
0105. ROCKET WITH HYBRID ENGINE 1-3

CHAPTER 2
LIGHT ANTI-TANK AMMUNITION 2-1

0201. CHARACTERISTICS OF LIGHT ANTITANK WEAPON 2-1
0202. CLASIFICATION OF LIGHT ANTITANK WEAPONS AMMUNITION 2-1
0203. FORMER USSR LIGHT ANTITANK WEAPONS 2-3
0504. FORMER CZECHOSLOVAK LIGHT ANTITANK WEAPONS 2-9

CHAPTER 3
ANTI-TANK MISSILES 3-1

0301. GENERALLY ON ANTI-TANK MISSILES 3-1
0302. ANTI-TANK MISSILES FIRST GENERATION 3-1
0303. ANTI-TANK MISSILE 9M14M MALYUTKA 3-1
0304. ANTI-TANK MISSILES SECOND GENERATION 3-3
0305. ANTI-TANK MISSILE 9M111 FAGOT 3-4
0306. ANTI-TANK MISSILE 9M113 CONCURS 3-6
0307. ANTI-TANK MISSILE 9M117 BASTION 3-8

CHAPTER 4
ANTI-AIRCRAFT GUIDED MISSILES 4-1

0401. GENERALLY ON ANTI - AIRCRAFT MISSILES 4-1
0402. ANTI-AIRCRAFT GUIDED MISSILE 9M32M “STRELA-2” 4-1
0403. ANTI-AIRCRAFT GUIDED MISSILE GROUPS OF “IGLA” 4-3
0404. ANTI-AIRCRAFT GUIDED MISSILE 9M37, 9M37M”STRELA-10” 4-6
0405. ANTI-AIRCRAFT GUIDED MISSILE V-755 “DVINA/VOLCHOV/DESNA” 4-8
0406. ANTI-AIRCRAFT GUIDED MISSILE V-600, V-601 “NEVA/PECHORA” 4-10
0407. ANTI-AIRCRAFT GUIDED MISSILE 3M8, 9M8 “KRUG” 4-12
0408. ANTI-AIRCRAFT GUIDED MISSILE 3M9, 9M3M “KUB/KVADRANT” 4-14

CHAPTER 5
ARTILLERY ROCKETS 5-1

0501. GENERALLY ON ARTILLERY ROCKETS 5-1
0502. ARTILLERY ROCKETS "Katyusha" M-8, M-13, M-30, M-31 5-1
0503. ARTILLERY ROCKETS “130-JRROF-RM 51” 5-3
0504. ARTILLERY ROCKETS “Grad” M-21 OF (9M22) 5-4

CHAPTER 6
TACTICAL MISSILES 6-1

0601. GENERALLY ON BALLISTIC MISSILES 6-1
0602. TACTICAL BALLISTIC MISSILES 9M21B, 9M21F of 9K52 ROCKETS COMPLEX – LUNA-M 6-3
0603. TACTICAL BALLISTIC MISSILES 9M79 of 9K79 ROCKET COMPLEX – TOCHKA 6-6

CHAPTER 7
OPERATIONAL MISSILES 7-1

0701. OPERATIONAL BALLISTIC MISSILES 8K14 of 9K72 ROCKET KOMPLEX - ELBRUS 7-1
0702. OPERATIONAL BALLISTIC MISSILES 9M714 of 9K714 ROCKET COMPLEX - OTR 23 OKA 7-4

ANNEX A: REFERENCES
ANNEX B: TECHNICAL PARAMETERS OF THE SELECTED FWP AMMUNITIONS

INTRODUCTION

1.1 Purpose

The information and guidance contained herein will help EOD staff officers and EOD operators to safely handle munitions. It is designed to gain an overall view of the construction of ammunition from the Former Warsaw Pact (FWP), to improve knowledge, to positively identify ammunition, and to safely dispose of unexploded ordnance, abandoned ammunition and stockpiles.

1.2 Scope

This handbook is the second volume of the FWP Ammunition series. The first volume contains general information about FWP explosives, hand grenades, artillery ammunition and mines and charges.

The second volume deals with rocket and missiles, artillery rockets, and light antitank weapons. The third volume will contain aerial ammunition.

The handbook discusses the construction, classification, identification and marking of FWP ammunition. The handbook is not a comprehensive manual, its aim to provide useful and important data on the ammunition to improve safety in disposal and handling.

1.3 Terms and definitions

The military terms, definitions and classification which are used in this publication are based on those used in the FWP, of course definitions of physical, chemical and mechanical processes do not recognize borders and therefore contain only formal differences.

However, for a better understanding and help users in Annex are attached definitions used in NATO, as set out in military dictionaries AAP-6, AOP-38, AOP-19, etc.

1.4 Distribution and use

This handbook is published as loose-leaf bound printed copies or as an electronic document for course participants. Persons having no further use for printed copies of the document are requested to return them to the editor of this document.

Explosive Ordnance Disposal Centre of Excellence authorizes official use of this handbook only for Former Warsaw Pact Ammunition Course with the principle of “For Officialy Use Only”.

(INTENTIONALLY BLANK)

CHAPTER 1
CLASSIFICATION OF ROCKETS AND MISSILES

0101. **BASIC DEFINITION**

1. **Rocket.** Rockets are unmanned, self-propelled ordnance, with or without a warhead, designed to travel above the surface of the earth and whose trajectory or course cannot be controlled during flight. They exclude guided missiles and the like whose trajectory or course during flight can be controlled remotely by homing systems, or by inertial and/or programmed guidance from within.

2. **Rocket propulsion**. Rocket propulsion is a propulsion caused by a reaction between a fuel and a oxidizer which generates hot gases vented through a nozzle. Specifically, rocket propulsion differs from jet propulsion in that jet propulsion utilizes atmospheric air as an oxidizer whereas rocket propulsion utilizes nitric acid or a similar compound as an oxidizer.

3. **Rocket motor.** A rocket motor is a non-air breathing reaction propulsion device that carries its own solid propellant (oxidizer-fuel combination); from which gases are generated by combustion and expanded through one or more exhaust nozzles.

4. **Rocket engine.** A rocket engine is a non-air breathing reaction propulsion devices that utilizes liquid fuels and oxidizers, from which hot gases are generated by combustion and expended through one or more exhaust nozzles.

0102. **CLASIFICATION OF ROCKETS AND MISSILES**

1. **Classification.** Rockets and missiles can be classified in many ways. The most widely used classification of rockets and missiles is by location; from where a rocket is fired and where the target is located:

a. **Ground or surface rockets and missiles**,

(1) Surface-to-surface:

- Anti-tank missiles, range 4 km;
- Tactical ballistic , range 30-120 km;
- Operational ballistic, 200-1,500 km;
- Strategic ballistic rocket,

  - Short- range 3,000 km;
  - Medium-range 6,000-8,000km;
  - Intercontinental above the 8,000 km.

(2) Surface-to-air, (e.g. anti-aircraft)

(3) Surface-to-ship.

b. **Air rocket and missiles**:

(1) Air-to-surface; (e.g. anti-tank);
(2) Air-to air;
(3) Air-to-ship.

c. **Naval rockets and missiles:**

(1) Ship-to-surface;
(2) Ship-to-air;
(3) Ship-to-ship.

0103. ROCKET WITH ROCKET MOTOR

1. **Characteristic.** A rocket motor has a combustion chamber in which **solid propellant** is burned. A rocket with a rocket motor is shown in Figure 1.1. The combustion chamber also serves as a container for propellant. At the rear part of the combustion chamber are nozzles. The solid propellant normally used are powders, i.e. solid colloid material (e.g. double base smokeless powders), or composite propellant (heterogeneous material e.g. rubber stock, asphalt, polyethylene).

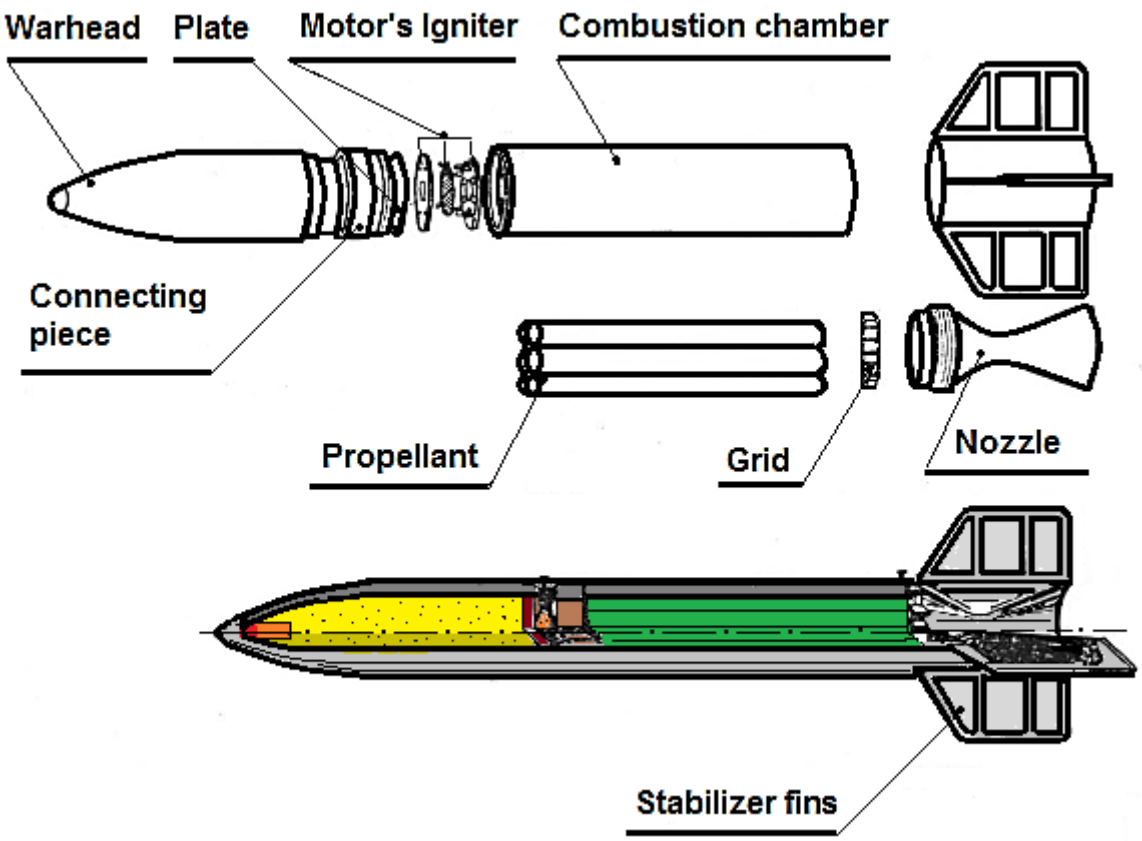

Figure 1.1

Propellants are ignited by electric powder igniters. The simplest construction of rocket motors is used in artillery, anti-tank and air non guided missiles. This type of motor has only one combustion chamber. The running of the motor is very short, a few tenths of a second. For guided missiles the same speed must be maintained throughout the flight and one motor is not enough and so a drive unit consists of a starting motor for missile launch and a flight motor for maintaining speed.

Rocket motor has normally only one chamber but they may have more. When a chamber is burned out it will be jettisoned.

0104. **ROCKET WITH ROCKET ENGINE**

1. **Characteristic**. Rocket engines that use **liquid fuel** consists of a fuel tank, combustion chamber with nozzle and devices to transport liquid fuel to the combustion chamber.

Rocket engine use mono-component or two- components fuels. Most use two-component fuels. One component is a fuel and the second is a oxidizer. Kerosene or ethyl alcohol is used as fuel, and liquid oxygen is most often used as a oxidizer. The mix consists of 20%-30% fuel and 70%-80% oxidizer. Fuel and oxidizer are contained in separate tanks and are piped separately to the combustion chamber.

The rocket engine with liquid fuel is complex and unreliable and therefore in the military solid propellant motors are preferred. Fuel and oxidizer are filled before ignition from the special storage containers. A schematic drawing of a rocket engine is in Figure 1.2.

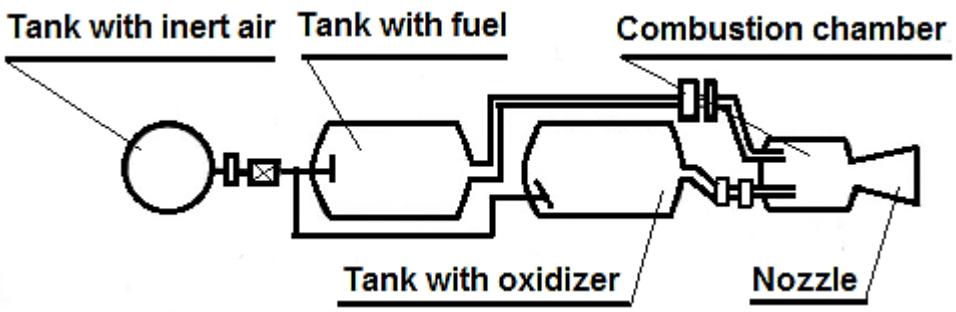

Figure 1.2

0105. **ROCKET WITH HYBRID ENGINE**

1. **Characteristic.** A hybrid engine has different states of fuel and oxidizer, for example liquid fuel and solid oxidizer or the opposite. The solid component is located in the combustion chamber and the liquid component is in a tank. The liquid component is squirted into the combustion chamber, where chemical reaction occurs and hot gases vent through the nozzle. Schematic drawing of hybrid engine is in Figure 1.3.

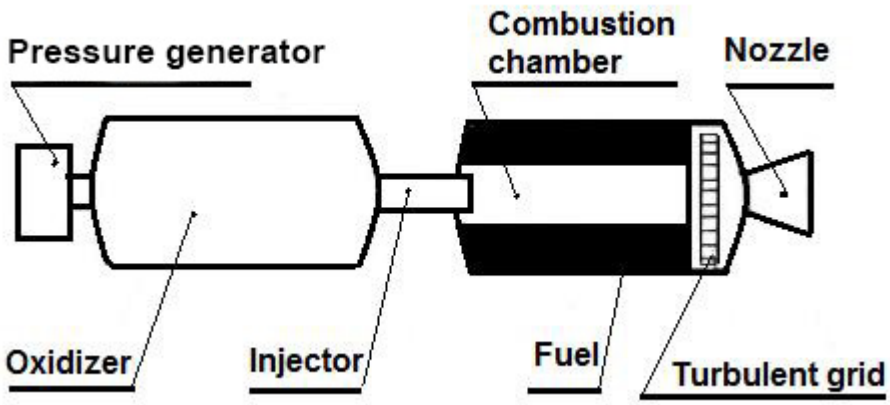
Pressure generator
Combustion chamber
Nozzle
Oxidizer
Injector
Fuel
Turbulent grid

Figure 1.3

CHAPTER 2
LIGHT ANTI-TANK AMMUNITION

0201. CHARACTERISTICS OF LIGHT ANTITANK WEAPONS

1. **Definition.** Light antitank weapons (LAW), sometimes are called Rocket propelled grenades are hand single barrelled weapons designed to destroy tanks and armour personnel carrier. A common name for a man-portable recoilless rocket antitank weapon is Bazooka.

Light antitank weapons with an anti-tank guns and anti-tank guided missiles are an important part of an anti-tank defence. Their advantage is easy handling, high mobility and light weight. LAW was developed as replacement of anti-tank hand grenades.

There exist some other types but the main type of ammunition is HEAT. The warheads are affixed to propelling charges or to rocket motors and stabilized in flight with fins or spin. LAW are loaded from the barrel tube with the exception of self-contained versions. Warhead is designed with a cumulative effect, meaning that it is shaped charge.

0202. CLASIFICATION OF LAW AMMUNITION

1. **Classification** of light antitank weapons ammunition by:

a. Propulsion:

– Recoilless;

– Rocket;

– Combination of active and reactive.

b. Frequency of use

– Self-contained (single-use);

– Reloadable.

2. **Recoilless LAW ammunition** (Figure 2.1)**.** A recoilless gun is a type of lightweight tube artillery that is designed to allow some of the propellant gases to escape out the rear of the weapon at the moment of ignition.

The principle of operation is based on providing a counterweight to the warhead. The propellant charge is connected to the warhead at the bottom of warhead shaft and consists of propellant and counterweight (steel sand). Counterweight is located at the rear part of propellant charge. On firing burning propellant produces gas and the gas pressure moves the warhead and counterweight in the opposite directions.

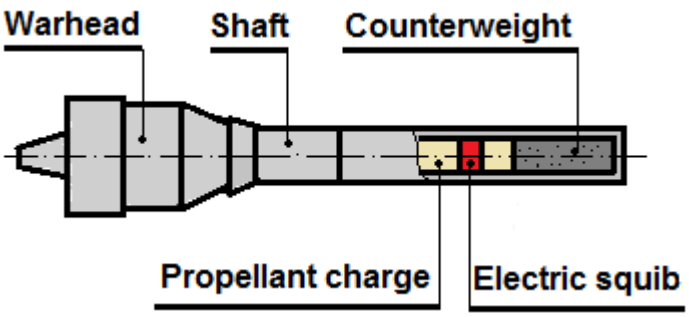

Figure 2.1

3. **Rocket LAW ammunition** (Figure 2.2). Rocket LAW ammunition is relatively simply with low weight. The warhead is connected with combustion chamber and nozzle. Combustion chamber is filled by propellant. At the rear part of rocket are stabilization fins.

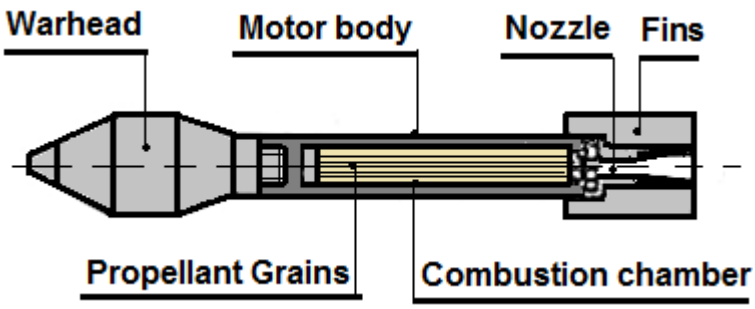

Figure 2.2

4. **Combination of active and reactive LAW ammunition** (Figure 2.3). This construction is a combination of recoilless and rocket ammunition. The complete round consists of a warhead, propellant charge (expelling or starting charge) and rocket engine with combustion chamber and propellant. The expelling charge provides ejection of projectile from barrel, and after that the rocket engine ignites and accelerates the projectile.

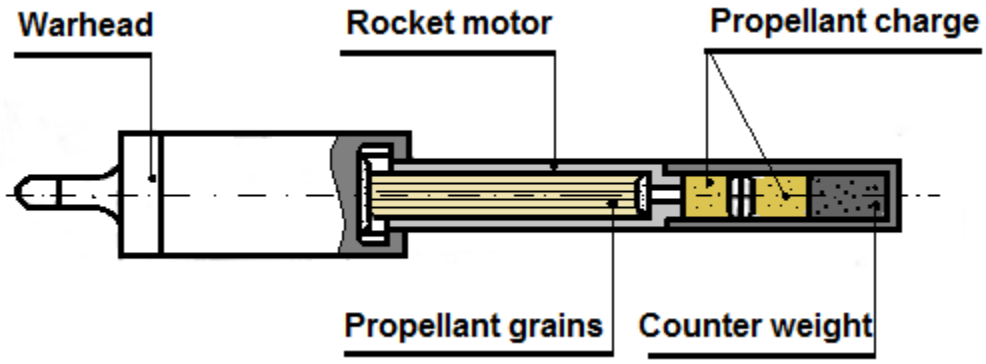

Figure 2.3

0203. **FORMER USSR LIGHT ANTITANK WEAPONS**

1. **Rocket propelled grenade RPG-2**

a. **Characteristics.** RPG-2 entered service in 1949 (Figure 2.4). It was the most commonly use in Indochina. Main variants: M57 (Yugoslavia), PG-7 (Egypt), RPG-2, Type 56 (China), B-40 and B-50 (Vietnam).

- Weight (loaded) 4.67 kg;
- RHA penetration up to 200 mm.(Rolled Homogeneous Armour);
- Effective range 100 – 150 m;
- Maximum range 200 m;
- Barrel calibre 40 mm;
- Round calibre 82 mm warhead.

Figure 2.4

b. **Ammunition.** Ammunition for the RPG-2 is PG-2 HEAT (Figure 2.5 is Chines equivalent).

- PG-2 is equiped with DK-2 or DK-4 base detonating fuze with self destruction;
- PG-2 is not rocket only reccoiless design.

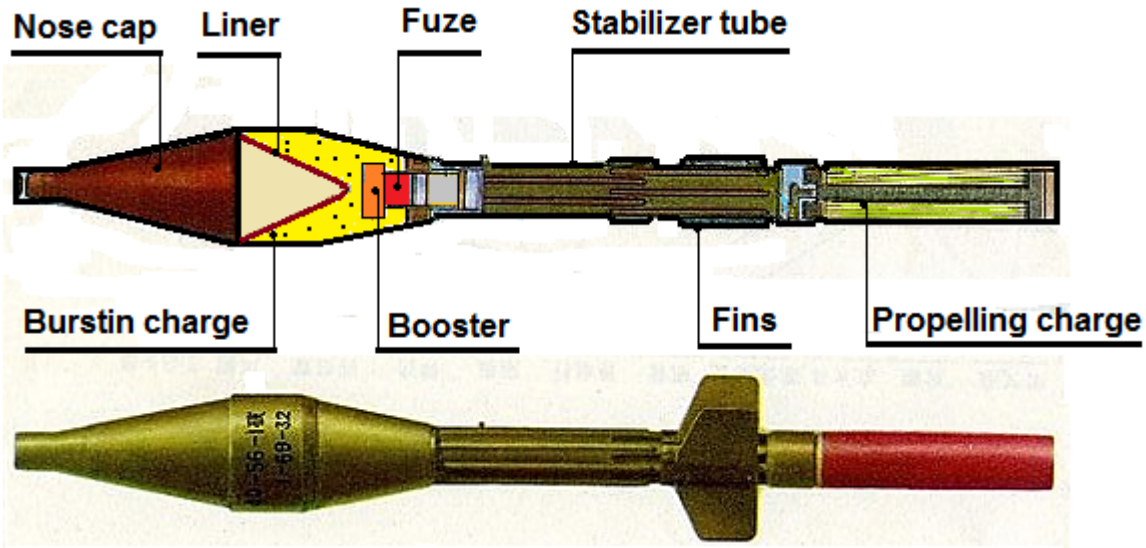

Figure 2.5

2. Rocket propelled grenade RPG-7

a. **Characteristics.** RPG-7 entered service in 1961(Figure 2.6). It is a portable reloadable over-calibre antitank rocket launcher. Main variants: RPG-7, RPG-7D3, RPG-7V2, type 69 (Chine version), 56 (China), B-41 (Vietnam).

– Barrel calibre:	40 mm;
– Round calibre:	85 mm (PG 7V);
– Weight:	6,300 g (depending on the type);
– Length:	990 mm.

Figure 2.6

b. **Ammunition of RPG-7 – PG-7V** (Figure 2.7)

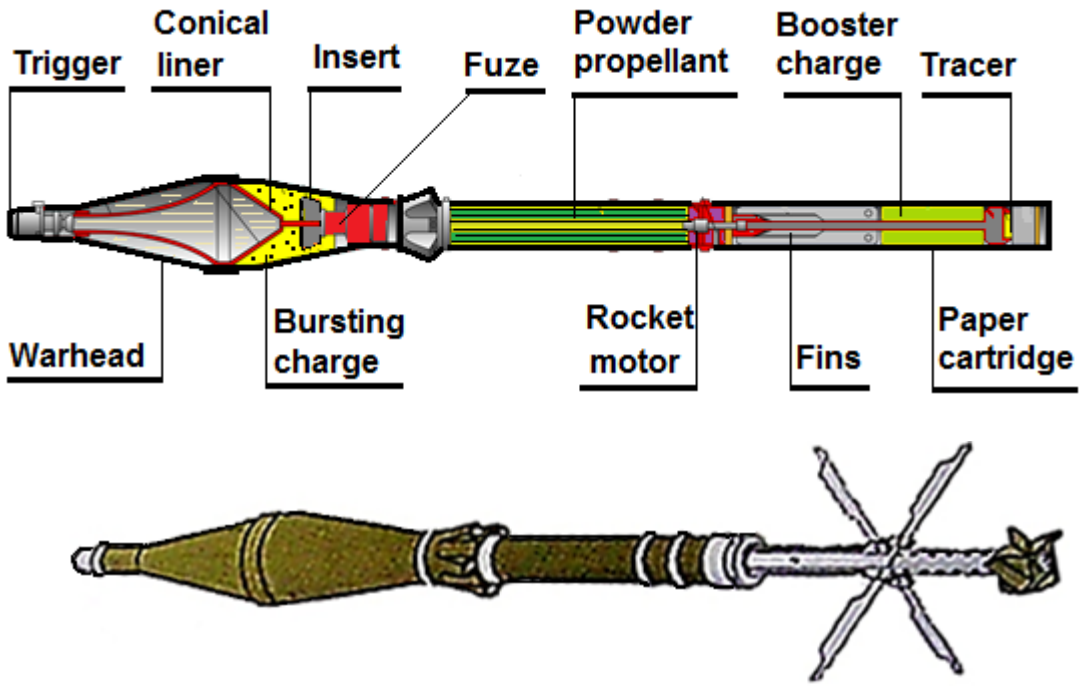

Figure 2.7

Main kinds of RPG-7 ammunition (Figure 2.8 and Tab 2.1)

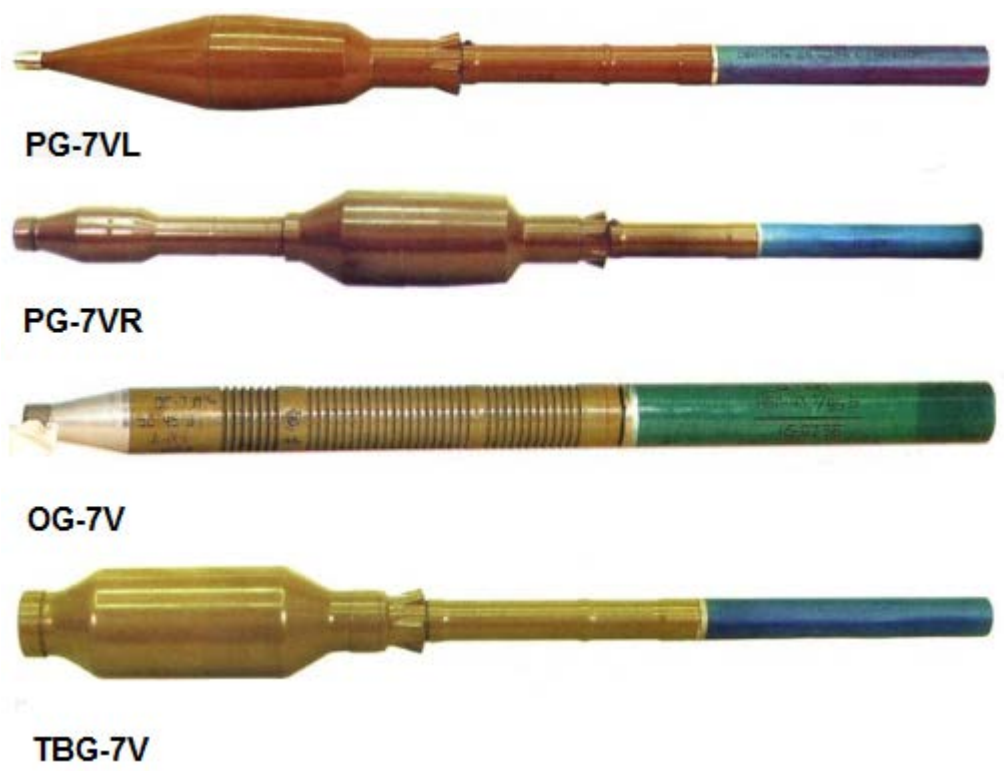

Figure 2.8

Tab 2.1

Name	Type	Weight	Explosive Weight	Diameter	Penetration
PG-7V	Single-stage HEAT	2.2 kg		85 mm	> 260 mm RHA
PG-7VL	Single-stage HEAT	2.6 kg	730 g (95% HMX + 5% wax)	93 mm	> 500 mm RHA
PG-7VR	Tandem HEAT	4.5 kg	1.43 kg (95% HMX + 5% wax)	64 mm /105 mm	600 mm RHA reactive armor 750 mm RHA without reactive armor
OG-7V	Fragmentation	2 kg	210 g A-IX-1	40 mm	
TBG-7V	Single-stage thermobaric	4.5 kg	1.9 kg OM 100МИ-3Л + 0.25 kg A-IX-1	105 mm	

3. **Rocket propelled grenade RPG-16**

a. **Characteristics.** RPG-16 entered service in 1970 (Figure 2.9). They were deployed during the Soviet-Afghan war between 1979-1989. The RPG-16 has a 58 mm barrel with a HEAT warhead and has a smoothbore recoilless launch using a rocket booster.

- Calibre: 58 mm;
- Weight: 12,400 g;
- Length: 1,104 mm (ready to fire);
- Efective range 800 m;
- RHA penetration up to 300 mm.

Figure 2.9

b. **Ammunition of RPG-16 – PG-16 HEAT** (Figure 2.10)

- Weight: 3,000 g.

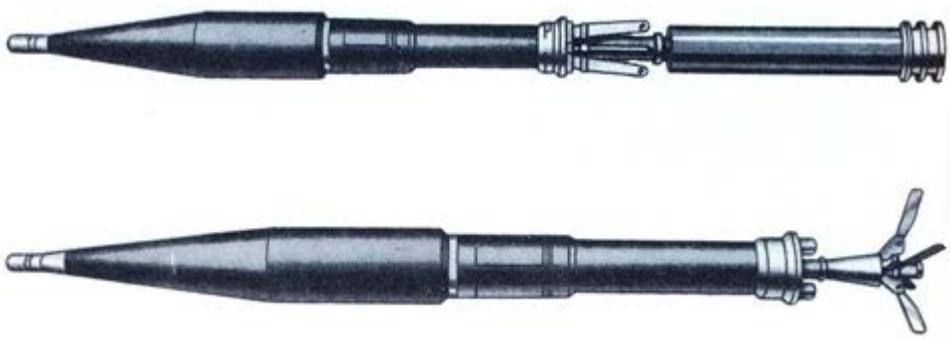

Figure 2.10

4. Rocket propelled grenade RPG-18

a. **Characteristics.** NATO code RPG-18 or "*Mukha*" entered service in 1972 (Figure 2.11). The RPG-18 is very similar to the US M72-series LAW anti-tank rocket.

- Calibre: 64 mm;
- Weight: 2,600 g;
- Length: 1,050 mm (ready to fire);
- Effective range 200 m;
- RHA penetration up to 375 mm.

Figure 2.11

b. **Ammunition of RPG-18 – PG-18 HEAT**

The 64 mm PG-18 HEAT warhead mounted on a small rocket capable of engaging any target within 200 meters. The warhead self-destructs 6 seconds after launch (Figure 2.12).

- Weight: 1200 g.

Figure 2.12

5. Rocket propelled grenade RPG-22

a. **Characteristics.** NATO code RPG-22 or "*Netto*" entered service in 1980 (Figure 2.13). The Soviet RPG-22 is a one-shot disposable short range anti-tank rocket launcher, based on the RPG-18 rocket launcher, but firing a larger 72.5 mm fin stabilised projectile.
The weapon can be prepared to fire in around 10 seconds, and can penetrate 400 mm of armour.

– Calibre:	72.5 mm;
– Weight:	2,700 g;
– Length:	850 mm (ready to fire);
– Effective range up to	160 m;
– RHA penetration up to	400 mm.

Figure 2.13

b. **Ammunition of RPG-22 – PG-22 HEAT** (Figure 2.14)

Figure 2.14

6. Rocket propelled grenade RPG-26

a. **Characteristics.** NATO code RPG-26 or "*Aglen*" entered service in 1985 (Figure 2.15). The Soviet RPG-26 is a one-shot disposable short range anti-tank rocket launcher. It fires a single-stage rocket with folding fins that unfold after launch. A variant of the RPG-26 called the RShG-2 is armed with a thermo baric warhead. The RShG-2 is heavier than the RPG-26 at 3.5 kilograms, and has a reduced direct fire range of 115 meters.

- Calibre: 72.5 mm;
- Weight: 2,900 g;
- Length: 770 mm (ready to fire);
- Effective range up to 170-250 m;
- RHA penetration up to 440 mm.

Figure 2.15

0504. FORMER CZECHOSLOVAK LIGHT ANTITANK WEAPONS

1. Bazooka T-21

a. **Characteristics.** The bazooka Type T-21 (Figure 2.16) is a Czechoslovak 82 mm smoothbore recoilless gun firing a shaped-charge, fin-stabilised projectile which is breech-loaded, and fired electrically. It was designed to destroy armoured targets, enemy fortifications and shelters. T-21 entered service in 1958.

- Calibre: 82 mm;
- Weight: 17,200 g without chassis;
- Length: 1,475 mm (ready to fire);
- Effective range up to 600 m;
- RHA penetration up to 228 mm.

Figure 2.16

b. **Ammunition of Bazooka T-21 – Nb T-21 HEAT** (Figure 2.17)

- Weight of complete round 3,600 g;
- Weight of projectile 2,000 g;
- Weight of explosive (TNT/RDX) 600 g.

Figure 2.17

2. **Rocket propelled grenade P - 27**

a. **Characteristics.** The P-27 is a Czechoslovak modification of RPG-2, that has been replaced in service by the RPG-75. P-27 entered service in 1951 (Figure 2.18).

- Calibre: 45/112 mm;
- Weight: 6,400 g;
- Length: 1,630 mm (ready to fire);
- Effective range up to 150 m (tank 50 m);
- RHA penetration up to 200 mm.

Figure 2.18

b. **Ammunition of P-27 – Nb P27**. Ammunition for the P-27 is not interchangeable with RPG-2 (Figure 2.19).

- Weight of complete round 3,750/3,340 g;
- Weight of explosive (TNT/RDX) 1,300 g.

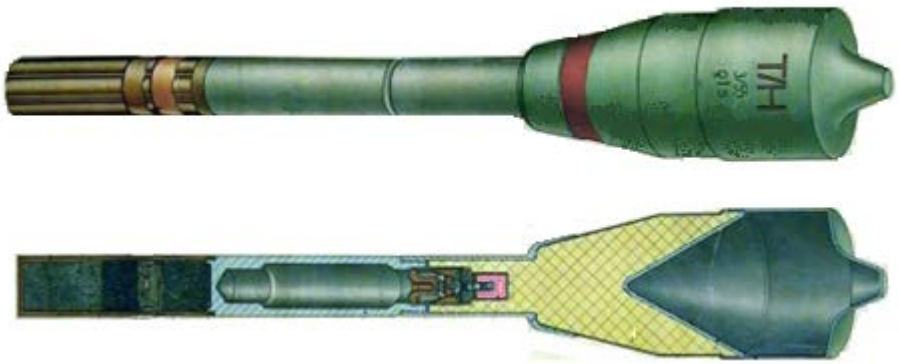

Figure 2.19

3. **Rocket propelled grenade RPG – 75**

a. **Characteristics.** The RPG-75 is a portable disposable launcher rocket propelled grenade, developed in the 1970s in Czechoslovakia. It entered service in 1975. It fires a 68 mm rocket with an effective range of 300 meters and maximum range of 1000 meters (Figure 2.20). It resembles the American M72 LAW rocket launcher.

- Calibre: 68 mm

- Weight: 3,200 g
- Length: 890 mm (ready to fire)
- Effective range up to 300 m
- RHA penetration up to 300 mm

Figure 2.20

b. **Ammunition of RPG-75.**

Round RPG-75 consists of cumulative warhead (Figure 2.21) with fuse z-75, and propellant cartridge

- Round calibre: 68 mm
- Weight of complete round 3,100 g;
- Weight of projectile 800 g;
- Weight of explosive 320 g.

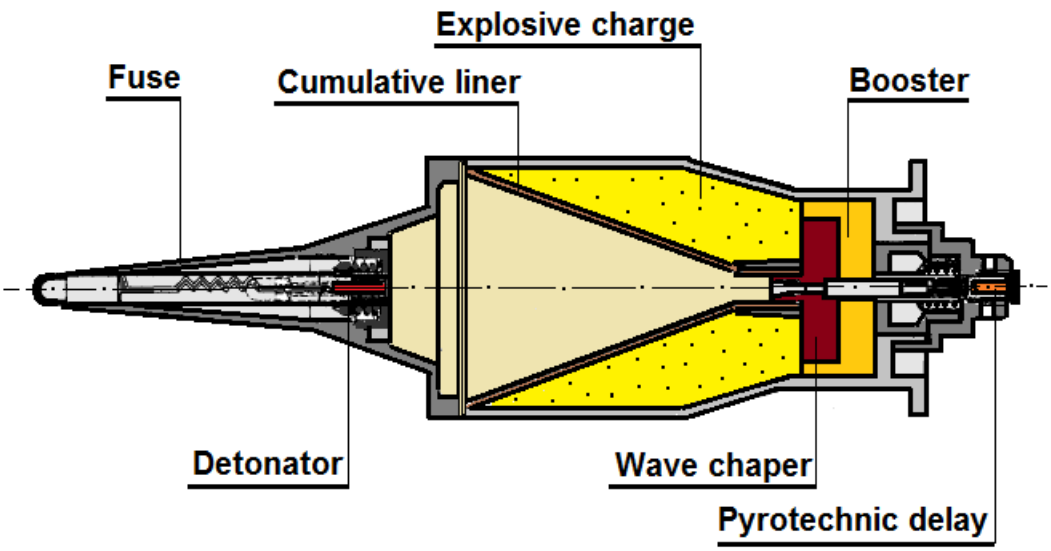

Figure 2.21

CHAPTER 3
ANTI-TANK MISSILES

0301. GENERAL INFORMATION ANTI-TANK MISSILES

1. **Characteristic.** Anti-tank missiles are characterized by their small size and maximum firing range of 2-4 km. Their probability of hitting the target is very high. Terminal effects are greater than the tank main gun. Anti-tank missiles warheads can pierce the armour almost all battle tanks. Firing position can be well hiden and masked. Because of their small dimension they are very mobile.

2. **Classification.** Anti-tank missiles are classified according to their method of guidance into missiles of the first generation, the second generation, 2.5 generation and third generation.

0302. ANTI-TANK MISSILES FIRST GENERATION

1. **Main characteristic**. Target tracking to the maximum range depends on the operator's skill. Throughout the entire flight the operator must observe at the same time the missile, the target and guide the missile to the target.

Manual Command to Line-of-Sight (MCLOS) means that the target tracking and the missile tracking and control is performed manually. The advantage of the first generation missiles is simple structure and resistance against active jamming by the enemy.

A significant deficiency is a great difficulty to guide missile on target in real terms and low flight speed (100-180 m/s) and so a long duration of flight. Another disadvantage is the long minimum range (400-500 m) that the target cannot be destroyed, because the first generation missiles cannot be guided in the first phase of the flight. Probability of hitting target is 60-80%.

The first generation missile includes 9M14M, 9M14MK, 9M14P1.

0303. ANTI-TANK MISSILE 9M14M MALYUTKA

1. **General description.** Malyutka is a wire-guided anti-tank missile developed in the Soviet Union, NATO code AT-3B SAGGER B (Figure 3.1). MALYUTKA is designed to destroy mobile and stationary armoured targets and other targets at ranges between 500 and 3,000 m. Targets are destroyed by a shaped charge. The missile can be fired from a portable suitcase launcher (9P111). The missile is guided to the target by means of a small joystick (9S415), which requires extensive training of the operator. The operator's adjustments are transmitted to the missile via a thin three-strand wire that trails behind the missile. The missile climbs into the air immediately after launch, which prevents the missile hitting obstacles or the ground. The missile uses a small gyroscope to orient itself relative to the ground; as a result the missile can take some time to bring back in line with the target, which gives it a minimum range of somewhere between 500 m and 800 m (dead zone). For targets under 1,000 m, the operator can guide the missile by eye; for targets beyond this range the operator uses the 8x power, 22.5 degree field of view 9Sh16 periscope sight. The operator must track missile and target at the same time.

2. **Construction**. MALYUTKA consist of a warhead and a cylindrical body with driving unit, stabilizing wings and tracer. It can be fitted with one or two tracers (second tracer is infrared for using Semi-Automatic Command to Line of Sight (SACLOS).

a. **Warhead**. Body of warhead is made from plastic material. In front part of warhead is thread for connecting with the nose part of the fuze. At the bottom of the warhead is well for connecting with rear part of the fuze and two lock to secure to the body of the missile. The inside of the warhead body is covered by silver layer as an electrical current lead. The warhead contains fuze 9E212 and a shaped charge with cooper liner. The high explosive used is A-IX-1 (95% RDX with 5% Wax). Armour penetration is 200 millimetres at 60°(400 mm under the angle 90°).

b. **Fuze.** Fuze 9E212 is an instantaneous, impact, nose, spitback, bore-safe fuse with a piezoelectric crystal and without self-destruct. Bore-safety is removed at a distance of 70 to 200 meters from control post.

c. **Body.** Body of missile is made from plastic material. Consists of:

(1) **Stabilising wings**. Four stabilizing wings which are made from plastic material coated with Dural aluminium sheet.
(2) **Tracer 9CH44** is consisting of pressed-in illuminating compound. Visibility of tracer is 3,000 m.
(3) **Instrument block** to transmit and distribute operator command and consists of distributor, gyroscope and coil with command wire
(4) **Driving unit.** Driving unit consists of starting motor for missile launch (120 m/s) and a flight motor for maintaining speed and power supply to controlling mechanism.

3. **Models and entered to service.**

a. 9M14 MALYUTKA (AT-3A SAGGER A wire-guided MCLOS. Entered service in 1963.
b. 9M14M MALYUTKA-M (AT-3B SAGGER B) wire-guided MCLOS. Entered service in 1973, improved motor, reducing flight time to maximum range. Weight 11 kg.
c. 9M14P MALYUTKA-P (AT-3C SAGGER C) wire-guided by MCLOS or SACLOS, improved warhead 460 mm versus RHA. Entered service in 1969. 9M14P1 Improved warhead 520 mm versus RHA.
d. 9M14-2, 9M14-2M; 9M14-2P; 9M14-2F; 9M14-2T (AT-3D SAGGER D) is wire-guided SACLOS entered service in the 1990s. Weight 13 kg. Range 3 km. Speed improved to 130 m/s.
   - 9M14-2 Malyutka-2 contains 3.5 kg HEAT warhead with 800 mm penetration versus RHA. Entered service in 1992. Weight 12.5 kg.
   - 9M14-2M Malyutka-2M contains 4.2 kg tandem HEAT warhead for improved capability against Explosive Reactive Armour (ERA). Weight 13.5 kg. Speed is 120 m/s.
   - 9M14-2P Malyutka-2P.
   - 9M14-2F Malyutka-2F contains 3.0 kg thermo baric warhead. Intended for use against troops and soft vehicles.

– 9M14-2T Serbian Yugo import SDPR Malyutka-2T SACLOS contains 4.4 kg tandem HEAT warhead 1,000 mm penetrations versus RHA, improved capability against ERA. Weight 13.7 kg. Speed is 120 m/s.

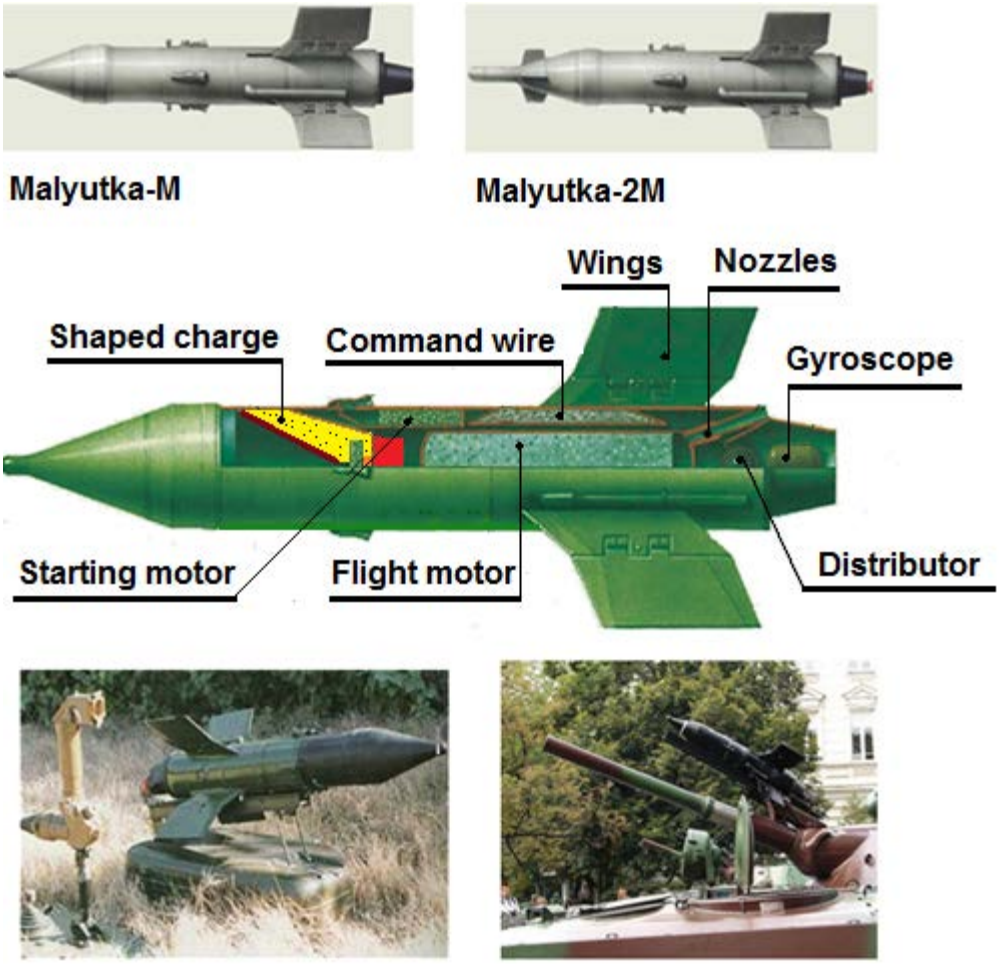

Figure 3.1

0304. **ANTI-TANK MISSILES SECOND GENERATION**

1. **Main characteristics**. Second-generation (SACLOS wire-guided) missiles require the operator to only keep the sights on the target until impact. SACLOS is a method of missile guidance where the operator has to continually point the sighting device at the target while the missile is in flight. The system's electronics in the sighting device and/or in the missile then guides the missile to the target. Automatic guidance commands are sent to the missile through wires or radio, or the missile relies on laser marking or a TV camera view from the nose of the missile. Dead zone is maximally up to 100 m. SACLOS enables increase flight speed to 180-220 m/s.

Disatvantage is a low resistance against active jamming, especially by infrared radiation. Probability of hitting target is 90%.

Light types of second generation missiles can destroy targets at up to 2000 m, heavy types have double the range and penetration. Examples are the Russian 9M14P (fired by 9P133) 9M111M-K /Fagot/, 9M111-2-K, 9M113-K /CONCOURS/, 9M117/BASTION/.

0305. **ANTI-TANK MISSILE 9M111 FAGOT**

1. **General description.** Fagot is a SACLOS wire-guided anti-tank missile system of the Soviet Union, NATO code AT – 4 Spigot (Figure 3.2). 9M111 FAGOT is designed to destroy mobile and stationary armoured targets and other targets at ranges of 70 to 2,000 m. Targets are destroyed by a shaped charge. The launcher tracks the position of an incandescent infrared bulb on the back of the missile relative to the target (which the operator is tracking) - and transmits appropriate commands to the missile via a thin wire that trails behind the missile. It is fired from the 9P135 launcher post - a simple tripod. A 9S451 guidance box is fitted to the tripod - with the missile sitting just above. The 9Sh119 sight is fitted to the left side (from the gunners POV).

A modernized version is 9M111M FAGOT M or – FACTORYA (Bulgarian designation) NATO code AT/4B Spigot B (Figure 3.6 a). The complete launcher system weighs 22.5 kg. Weight of 9M111missile is 13 kg and 9M111M missile is 13. 2 kg.

To push the missile out of the launch tube the system uses a starting motor located in the rear part of the tube. The missile leaves the launch tube at 80 m/s. It is quickly accelerated to 186 m/s by its solid fuel flight motor. This initial high speed reduces the dead-zone of the missile, since it can be launched directly at the target, rather than in an upward arc.

The complete launcher system 9K111 consists from this main parts; missile 9M111, launch devices 9P135M, launch tube, starting motor. The missile entered service in 1970.

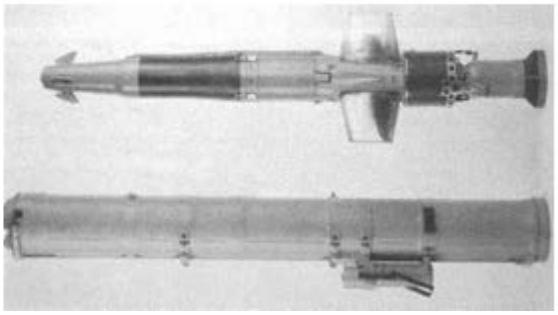

Figure 3.2

2. **Construction of missile 9M111.** The missile consists of head part; combat part with fuze; flight motor and instrument block (Figure 3.3).

a. **Head part** consists of vane servomechanism and ballistic cap.

b. **Combat part** (Figure 3.4) consists of contact attachment, shaped charge and fuze.

(1) **Shaped charge** is filled with OKFOL (95% HMX and 5% Wax). Warhead penetrates Rolled homogeneous armour (RHA) 400/200 mm at angles of 90°/60°. 9M111M-FAGOT M penetrates Rolled homogeneous armour (RHA) 460/230 mm at angles of 90°/60°.

(2) **Fuze** 9E234 or 9E234M is point-initiating base-detonating (PIBD), electromechanical, instantaneous, bore-safe with self-destruction.

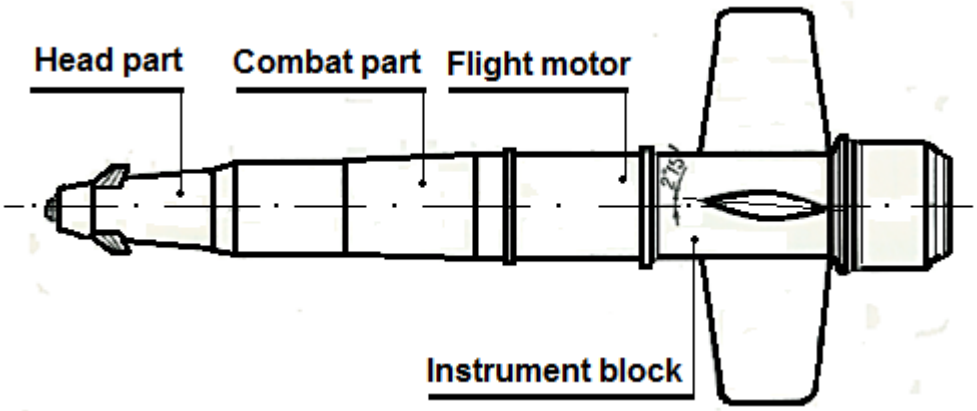

Figure 3.3

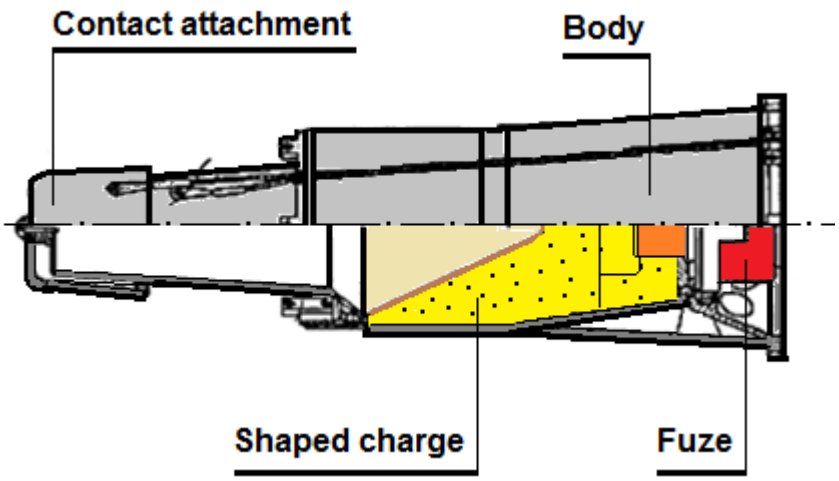

Figure 3.4

c. **Flight motor** uses solid propellant. It has one combustion chamber and two-stages to provide initial speed and maintenance of flight.

d. **Instrument block** consists of body, four stabilizing wings, coordination cell, command block and gas switch.

3. **Construction of launch tube.** The missile is stored and carried in a container/launch tube and power supply of electric circuits. The launch tube consists of a plastic tube, front and rear covers, supply block and socket for connecting with missile. It include the starting motor that provides the first stage of flight. (Figure 3.5) The tube protects the missile against climatic conditions and launches the missile.

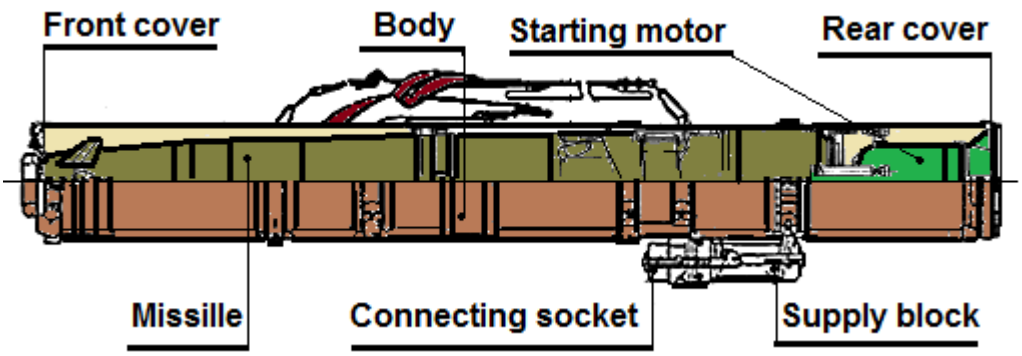

Figure 3.5

c. **Construction of starting motor.** The solid propellant starting motor pushes the missile out of the launch tube and gives initial movement. It consists of one combustion chamber, a set of tubular propellant and an igniter.

0306**. ANTI-TANK MISSILE 9M113 CONCURS**

1. **General description.** The 9M113 CONCURS is SACLOS wire-guided Anti-tank missile of the Soviet Union, NATO code AT–5 Spandrel or AT-5A (Figure 3.6 b).

a. **The 9M113 CONCOURS** was developed alongside the 9M111; both missiles use similar technology, only differing in size. A comparison of both missiles is shown in Figure 3.6. The warhead penetrates rolled homogeneous armour (RHA) to 600/300 mm at angles of 90°/60°.

The missile is stored and carried in a fiberglass container/launch tube. The system uses a gas generator to push the missile out of the launch tube. The gas also exits from the rear of the launch tube in a similar manner to a recoilless rifle.

The missile leaves the launch tube at 80 meters per second, and is quickly accelerated to 200 meters per second by its solid fuel motor. This initial high speed reduces the dead zone of the missile, since it can be launched directly at the target, rather than in an upward arc. In flight the missile spins at between five and seven revolutions per second.

Minimum range is 75 meters, and maximum engagement range is 4,000 meters (daytime) and 3,500 meters (night).

b. **The 9M113M CONCURS-M** NATO code AT-5B Spandrel B (Figure 3.7) has a tandem warhead - with an extended explosive probe. The warhead penetrates RHA to 800/300 mm at angles of 90°/60°.

The missile entered service in 1974, the modernized type 9M113M was entered in service in 1975. Weight of 9M113 with container is 25. 5 kg.

a. **9M111 Mnh Practice Missile** b. **9M113 Nh Practice Missile**

Figure 3.6

9M135M and 9M113M Missile

Figure 3.7

2. **Construction of missile 9M113**. The missile consists of steering wings, warhead with shaped charge; 9A234M base fuze; flight motor and instrument block (Figure 3.8).

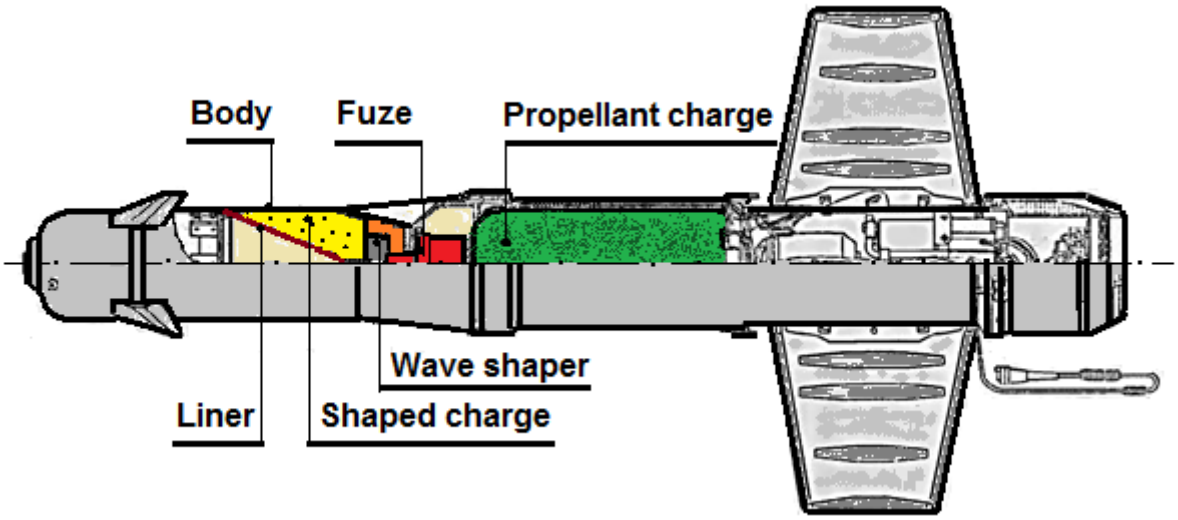

Figure 3.8

a. **Combat part** consists of shaped charge (OKFOL- 95% HMX with 5% wax), a red copper cone (liner). In the lower part of the explosive charge is placed wave shaper to ensuring the detonation wave will hit the cone in a more even way, resulting in improved armour penetration.

b. **Fuze.** The 9A234M base fuze is of the PIBD (Point Ignited Base Detonated) type. It exists of aluminium fuze housing with the booster housing screwed on top. The booster housing is placed in the base of the hollow charge.

The nose fuze exists of two thin metal cups, placed electrically isolated over one another. When on impact the nose is crushed and the outer cup touches the inner cup, the electric circuit over the capacitor and the firing cap is closed, exploding the firing cap. If the missile misses the target, the pyrotechnic fuze will burn up until it reaches the last spring-loaded pin which sinks, activating the self-destruct switch after 4000 meters of flight.

The 9M234M fuze, used in the 9M113 “Concurs” is a derivate of the 9M234 fuze, used in the 9M111 “Fagot”. As the 9M113 has a longer time to flight -19 second for the 9M113 and 11 seconds for the 9M111- to maximum range (and self-destruct) the main difference will be the burning speed of the pyrotechnic delay fuze until self-destruct.

0307. **ANTI-TANK MISSILE 9M117 BASTION**

1. **General description.** The 9M117 Bastion is a Russian laser beam-riding anti-tank missile, NATO code AT–10 Stabber (Figure 3.10a). There are seven versions of the Stabber, consisting four basic versions and three improved versions. Anti-tank guided missile (ATGM) Bastion and other variant were developed for the purpose of upgrading old tanks T-55 and T-62, armed with cannons 100mm and 115 mm. Both sets use the 9M117 missile.

2. **Construction of missile 9M117**. The complete 100 mm ZUVK 10-1 (ЗУВК 10-1) gun launched missile round resembles a piece of conventional ammunition. It is a fixed round with the missile projectile secured to the cartridge sleeve. The body of the missile extends almost to the base of the cartridge sleeve and the missile contain own rocket motor. The complete 100 mm ZUVK 10-1 (ЗУВК 10-1) gun launched missile round is handled and loaded in the same manner as a conventional round. The ejection charge in cartridge sleeve propels the missile along the barrel.

This missile is part of a fixed round ZUVK10, ZUVK10-1 (Figure 3.9) is a 100 mm calibre for Bastion and ZUVK10-2 is 115 mm calibre for Šeksna. The 100 mm round ZUVK-10 resembles a normal 100 mm anti-tank round (Figure 3.10b) and is loaded and fired in the same fashion but the round uses a reduced explosive charge to launch the missile 9M117 out of the barrel of the gun at around 400 to 500 m/s. After leaving the barrel of the gun, a small cover falls away from the window on the rear of the missile.

The missile's flight time to 4,000 meters is approximately 12 seconds. After 26 to 41 seconds the missile self-destructs. The missile entered service in 1981.

a. **Warhead.** The missile round consists of 9H136M shaped charge warhead from OKFOL-3.5 (95% HMX with 5% Wax).

b. **Fuze**. Warhead is ignited by a 9E256 Point-Detonation (PD)/ Graze- actuated fuze.
c. **The sustainer (fligh) rocket motor** ignites 1.5 seconds after firing the missile, and it burns for 6 seconds.

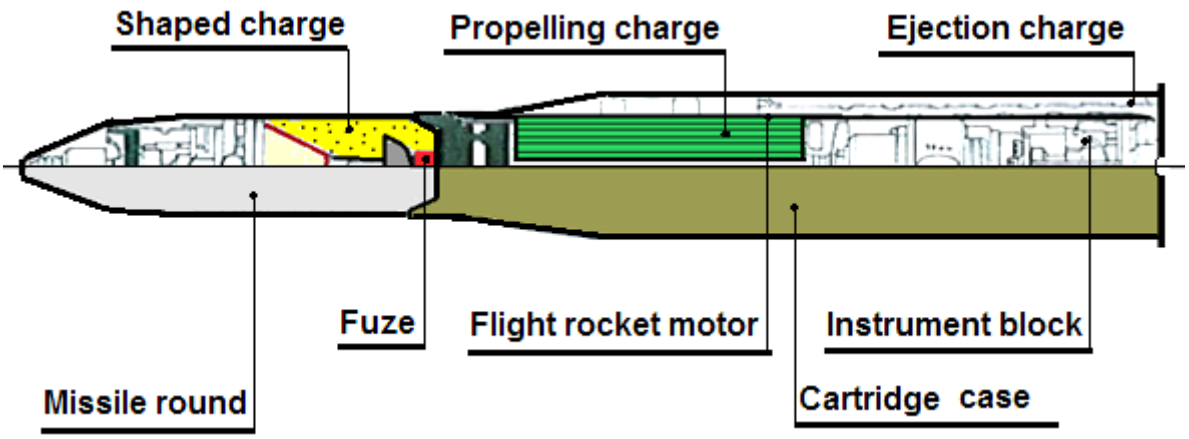

Figure 3.9

3. **Other models.** The basic rounds are all virtually identical, except for the calibre difference between the 9M117 and 9M116, but are different enough that they cannot be interchanged; a Kastet cannot be fired from a BMP-3, and MT- 12 cannot fire a Bastion, etc.

a. **The 9M116** Sheksna fired by a specially-modified T-62 tank known as the T-62M. 9M117 missile is equipped with a shell insert, which is disconnected on the fly. Shell insert allows firing from smooth barrel of cannon 5TS U-calibre 115 mm, which are armed T-62. Round has still a 100 mm calibre.

b. **The 9M116M1** Sheksna fired by the T-62M. The difference between the basic and improved versions is the tandem warhead used by the improved models to allow a better result against ERA.

c. **The 9M117** Bastion is the basic versions and fired by a specially-equipped version of the T-55 tank known as the T-55 AM2.

d. **The 9M117** Kastet fired by versions of the MT-12 field gun equipped with a laser guidance module.

e. **The 9M117** Basnya fired by BMP- 3. The improved versions are the 9M117M1 Kan fired by the MT-12 field gun.

f. **The 9M117M1** Arkan fired by the BMP-3. The difference between the basic and improved versions is the tandem warhead used by the improved models to allow a better result against ERA.

a. **9M117 Missile**

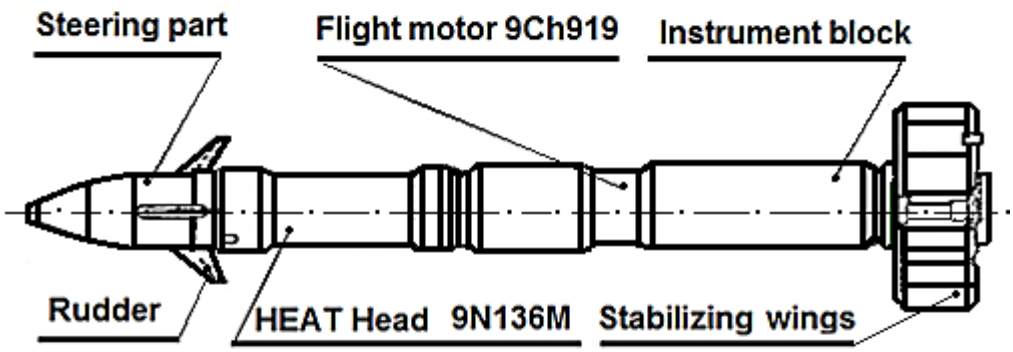

b. **ZUVK 10-1 (ЗУВК 10-1) Complete round**

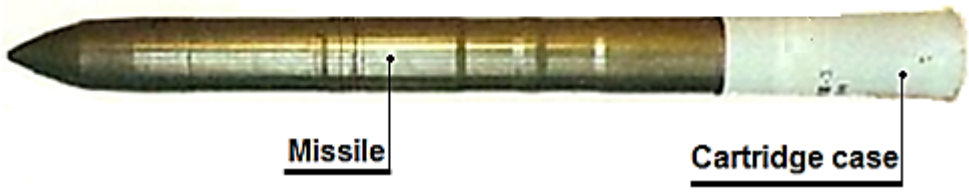

Figure 3.10

CHAPTER 4
ANTI-AIRCRAFT GUIDED MISSILES

0401. GENERAL INFORMATION ANTI - AIRCRAFT MISSILES

1. **Characteristics.** A surface-to-air missile (SAM), or ground-to-air missile (GTAM), is a missile designed to be launched from the ground to destroy aircraft or other missiles.

2. **Classification.** Surface-to-air missiles are classified by their guidance, mobility, altitude and range. Man-portable air-defence systems (MANPADS) are the smallest SAMs and are capable of being carried and launched by a single person and thus suitable for local air defence, such as against attack helicopters. They are sometimes attached to vehicles in order to increase their mobility. Generally, MANPADS have a range of around five kilometres (three miles). Soviet MANPADS have been exported around the world and can still be found in many of their former client states. Larger land-based SAM's can be deployed from fixed installations or mobile launchers. In the case of mobile launchers, they are either wheeled or tracked. The tracked vehicles are usually armoured vehicles specifically designed to carry SAMs. Larger SAMs may be deployed in fixed launchers, but can be towed/re-deployed at will. The range of mobile SAMs varies greatly, from just over a dozen to several hundred kilometres. For example, the Russian S-400 has a range of 400 km.

0402. ANTI-AIRCRAFT GUIDED MISSILE 9M32M “STRELA-2”

1. **General description**. Anti-aircraft guided missile 9M32M NATO code SA-7 Grail, (Figure 4.1) is a man-portable, shoulder-fired, surface-to-air missile system with a high explosive warhead and passive infrared homing guidance. It is designated to engage low-altitude targets when they are approaching and receding and in clear visibility conditions. Targets can be hovering or mobile. It was the first generation of Soviet man-portable SAMs, entering service in 1968, with series production starting in 1970. Weight of missile is 9.8 kg.

Figure 4.1

2. **Construction of missile 9M32M**. The missile consists of a thermal homing guidance head; combat part (warhead); motor part and stabilizing wings. (Figure 4.2)

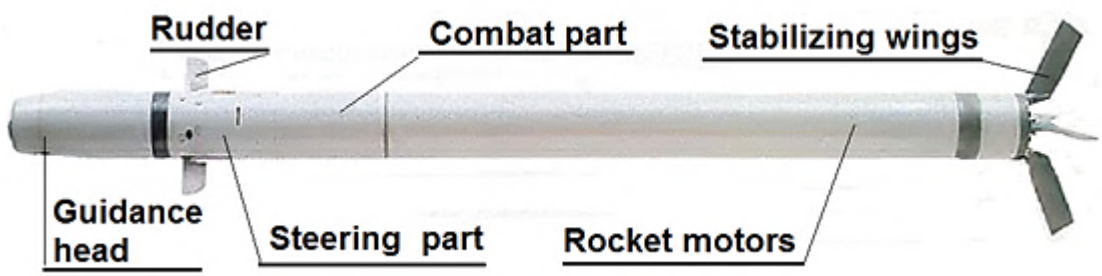

Figure 4.2

a. **Warhead** consists of a body, explosive charge, primer and fuze (Figure 4.3) The explosive charge is directed-energy blast fragmentation high explosive (fragmentation with shaped charge effect). Weight of explosive filler is 0.37 kg HMX.

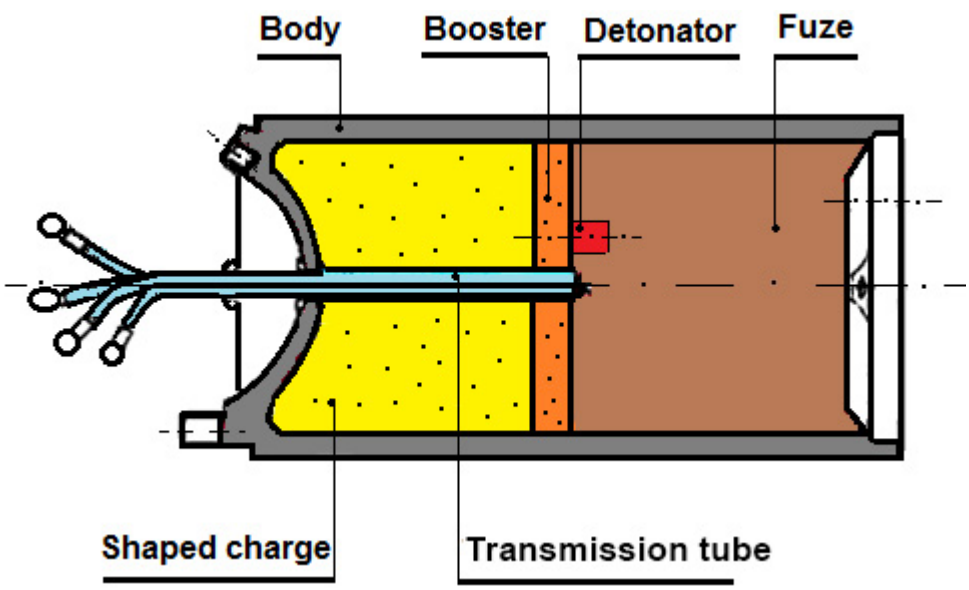

Figure 4.3

b. **Fuze** is electromechanical, impact, bore-safe with self-destruction. It has two stages of safety, which ensure safety of missile at the launch, storage and transport. It consists of a safety mechanism, detonation mechanism and self-destruction mechanism, impact switch and assembly panel. Simplified operation of the fuze:
   - The fuze is actuated when the missile is shot and the electric current is connected to the breaking capacitor, followed by the pyrotechnic safety devices and pyrotechnic delay devices for self-destruction being initiated.
   - At the distance of 80-250m the pyrotechnic safety devices burn out and breakpoint is realized. The activation mechanism is based on the angular

movement of a rotating insert which contain the squib (electric detonator) to the combat position by centrifugal forces.

- This position of the rotating insert with squib (electric detonator) allows explosion of warhead at the impact on the target. After the impact of the missile on the target the pulser coil generates electric current and activates the squib (electric detonator) or after a 14-17 sec pyrotechnic delay devices transmits flame to the electric detonator and initiates the self-destruction of the missile.

c. **Drive unit** consist of a starting motor and a flight motor. The weight of the motor's filling is 4.2 kg:

- Starting motor contains solid propellant and pushes the missile out of the launch tube and give the first movement and rotation.
- Flight motor has one combustion chamber and is two-stage solid propellant motor that provides initial acceleration maintenances of flight.

2. **Construction of launch tube** (Figure 4.4). Launch tube protects the missile when handling, during transportation and in storage; and allows aiming, firing and provides gunner protection against gases from the starting motor. It consists of fiberglass laminate tube, trigger mechanism and power supply.

Figure 4.4

0403. **ANTI-AIRCRAFT GUIDED MISSILE GROUPS OF "IGLA"**

1. **General description**. Anti-aircraft missile 9M39 "Igla", NATO code SA-18 "Grouse" entered in service 1983. Missile 9M313 "Igla-1", NATO code SA-16 "Gimlet" entered in service 1981. Other relevant type is 9M342 „Igla-C NATO code SA-24 "Grinch".

Igla-1 is a simplified version with a simpler IR seeker based on the earlier Strela-3/SA-14. Guidance system is cooled, passive IR homing device (operating in the medium IR range). The SA-16 Gimlet is fitted with a new IFF (Identification-Friend-or-Foe) system to prevent firing on friendly aircraft. The „Igla"S-18 Grouse is not an improved version of the earlier "Strela" family (Strela-2/SA-7 and Strela-3/SA-14), but an all new project. However, combat part especially warheads are very similar and differ only in the weight of explosive and in partial improvement electromechanical fuzes. Anti-aircraft complexes the "Igla" family of missiles consist of three parts. First is the missile which is housed in the launch tube. The grip stock is

attached to the launch tube and is fed by a power supply unit that provides electrical power and cooling gas to the missile before launch.

1. **Construction** of missile 9M313 (Figure 4.5). The missiles consist of a optical homing guidance head; control part, warhead; drive unit and stabilizing wings. Weight 9M313 and 9M39 is 10.8 kg.

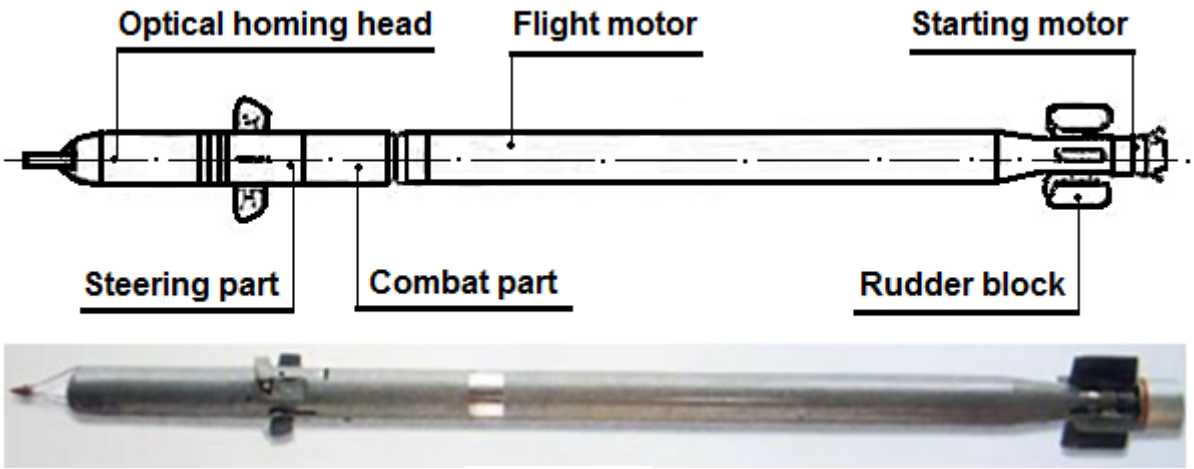

Figure 4.5

a. **Optical homing head** include the passive IR seeker is in the nose and a spike that is fitted to reduce drag. 9M39 and 9M342 have an improved seeker.

b. **Control section** consists of four small fins that steer the missile.

c. **Warhead** (Figure 4.6) consists of directed energy blast fragmentation charge (HE with cumulative effect), fuze and explosive generator. Weight of warhead is 1.17 kg; weight of explosive charge is 0.39 kg HMX. Missile 9M342 has more weight of explosive, 0.585 kg HMX.

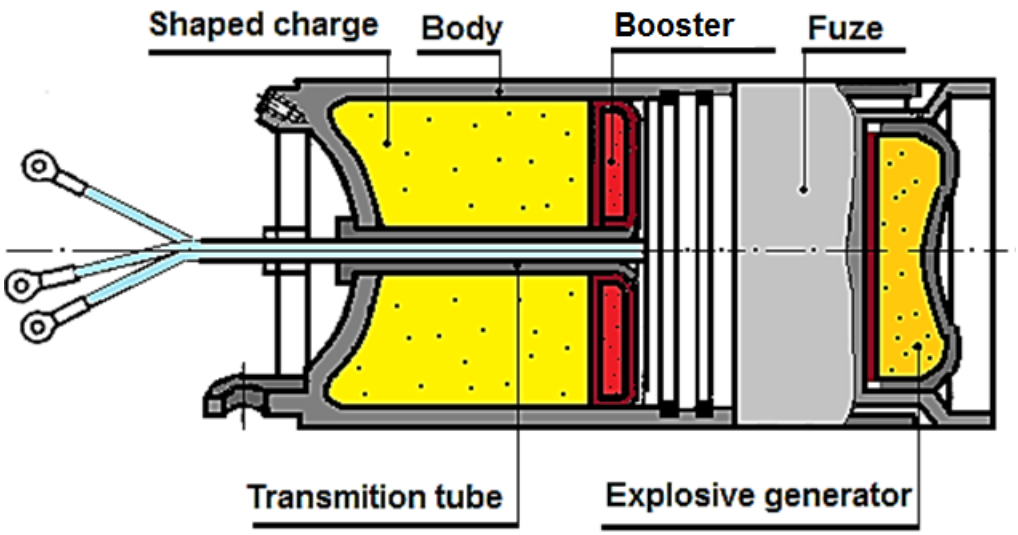

Figure 4.6

d. **Fuse** is electromechanical, impact, bore-safe with self-destruction (delayed impact, magnetic and grazing). Fuses of progressive models of Igla were gradually improved. The fuse is designed to create a shockwave to initiate the main charge if the missile hit the target or when the self-destruct time elapses, and also if is transfer the detonating impulse from explosive charges to the filler of the explosive generator. Action of fuze is very similarly to fuze of 9M32M missiles. Pyrotechnic safety devices burn out after 1-1.9 sec and breakpoint is realised. Structural scheme of the fuze action is on the Figure 4.7.

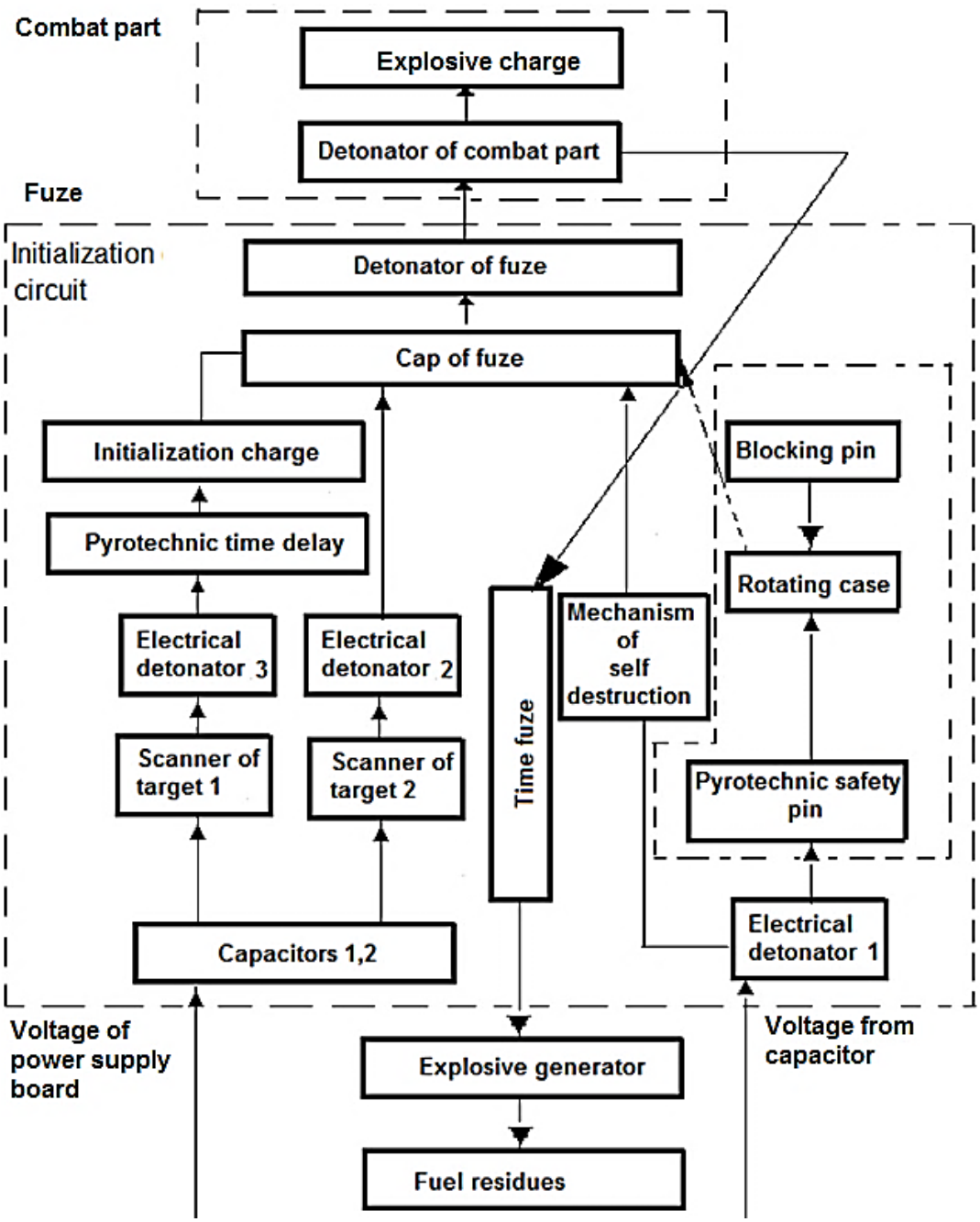

Figure 4.7

d. **Explosive generator** is designed to detonate unburnt propellant in the flight motor and create greater destructive effects. It is activated by main charge explosion.

e. **Drive unit.** The entire aft section is made up by the solid fuel flight (sustainer) motor and a starting (boost) motor. The starting (boost) motor expels the missile from the launch tube. The amount of propellant in flight (sustainer) motor of each model varies according their maximum range and maximum speed.

2. **Launch tube.** Launch tube is made from fiberglass laminate and protects missile when handling, during transportation and in storage; and allows aiming, firing and provides gunner protection against gases from the starting motor. It consists of a tube, trigger mechanism (grip stock) and power supply unit.

0404. **ANTI-AIRCRAFT GUIDED MISSILE 9M37, 9M37M ”STRELA-10”**

1. **General description**. Anti-aircraft system 9K35, NATO code SA-13 Gopher (Figure 4.8) is a highly mobile, visually aimed, optical/infra-red guided, low-altitude, short-range surface to air missile system. It has the capability to use radars for target acquisition and rangeing.

Missile 9M37 entered service in 1976 and 9M37M in 1981. The 9K35 is based on the MT-LB tracked amphibious chassis. Anti-aircraft system 9k35 is fitted with a launcher for four missiles.

Figure 4.8

2. **Construction of missiles.** The 9M37 (Figure 4.9) is an enlarged and more capable version of the earlier 9M31 missile and is fitted with an improved infra-red seeker. The missile has a conventional layout with the seeker in the front, followed by the warhead and the rocket engine. It is transported and launched from a ribbed container.

The improved 9M37M features a further improved infra-red seeker. The 9M37MD is a 9M37M fitted with a heavier and more capable warhead.

The latest 9M333 missile is a further improvement of the 9M37MD. It features a dual mode seeker with photo contrast and passive infra-red guidance. The 9M333 has a much better resistance to flares and decoys and is able to lock on to smaller targets such as UAV's and cruise missiles.

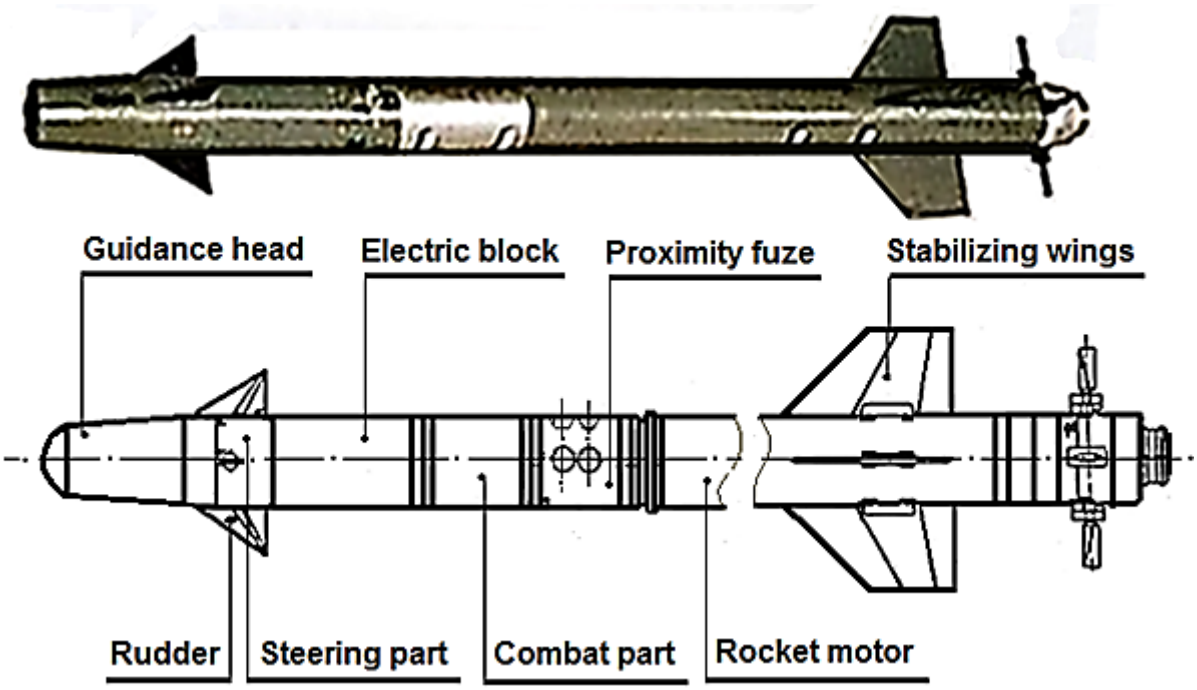

Figure 4.9

a. **Guidance homing head** is electro-optical/infra-red guidance. It has the capability to be cued by radars for target acquisition and range. Steering part with electrical block control two pair of rudders and homing missile.

b. **Warhead** consists of HE fragmentation charge. Weight of explosives is 2.7 kg. Improved missiles 9M37MD and 9M333 has 5 kg explosives in warhead.

c. **Initiation devices** consist of two types of fuze. There is impact fuze and proximity fuze:

(1) **Impact fuze** is electromechanical and transmits an electrical signal to the battle circuit of safety device after striking the target; it is located in the block of the steering motors.
(2) **Proximity fuze** is designed to detect air targets and sending an electrical signal to the battle circuit of safety device when the missile passes the target at the effective distance. 9M37 and 9M37M missiles have active xenon lamp proximity fuzes, 9M37MD and 9M333 missiles have active laser proximity fuzes. It is located behind the combat part.
(3) **Safety device is** designed to transmit electrical signal to combat part after its receiving from either fuze. Provides safe handling with missile until activation of warhead. It is located in the combat part.

d. **Rocket motor** is single-chamber and two-stage, solid fuel with ignition devices. Motor creates a thrust to start (first stage) and to maintain an average speed of missile flight (second stage) until the engine burns out. If missile does not hit target, missile will continue for 16 seconds in flight and after

this time, safety device dearms the missile warhead and the missile does not explode when it hits the ground.

0405. **ANTI-AIRCRAFT GUIDED MISSILE V-755 “DVINA/VOLCHOV/DESNA”**

1. **General description**. Missile V-755 is launched by S-75 Russian surface-to-air missile (SAM) system, NATO code SA-2 Guideline (Figure 4.10). It is a low to high-altitude, command guided system. Since its first deployment in 1957 (V-750), it has become the most widely-deployed and used air defence missile in history. These types of missiles were designed for the defence of both fixed targets and field forces. The V-750 missile (first version of V-755) and other types were designed to cope with the threat posed by small groups of aircraft rather than massed raids. Some types of “Volchov” missiles are in Table 1.

Figure 4.10

Table 1

	Rocket	Nato Code
SA-75 Dvina	V-750	SA-2 Guideline
SA-75M Dvina	V-750V	SA-2b Guideline Mod 1
S-75 Desna	V-750VN	SA-2c Guideline Mod 2
S-75D Desna	V-750VN	No code
S-75M Volchov	V-755	SA-2d Guideline Mod 3
S-75 Volchov	V-760	SA-2e Guideline Mod 4
S-75m2	V-759	SA-2f Guideline Mod 5
M-2M Volchov	V-753	SA-N-2 Guideline

1. **Construction of missiles.** The missiles are guided using radio control signals. The V-755 is a low to high altitude surface-to-air missile (Figure 4.11). The missiles consist of a homing guidance head, radar fuze, combat part; tanks (reservoir) with oxidizer and fuel, electric instrument block, drive unit and stabilizing part.

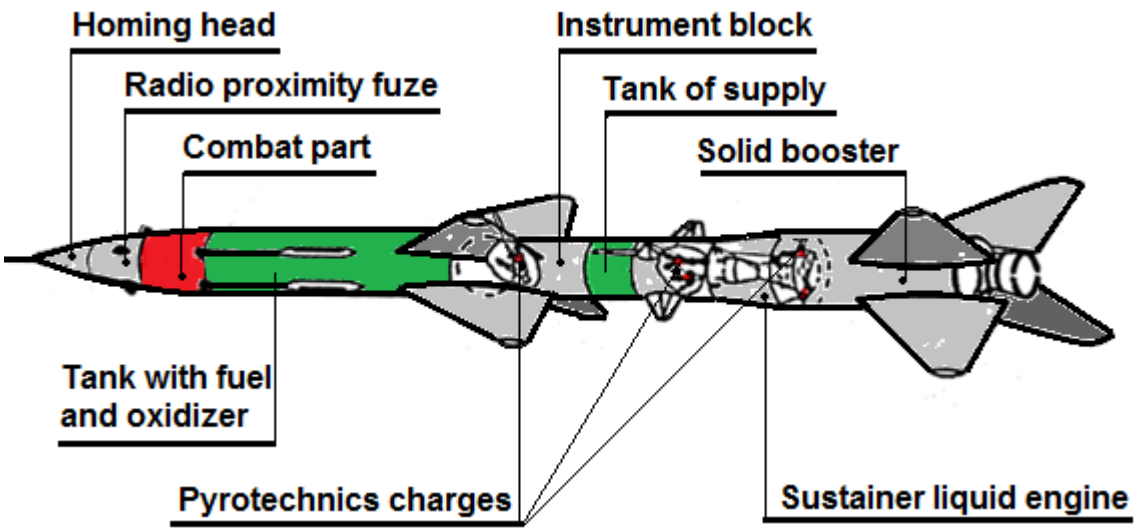

Figure 4.11

a. **Guidance homing head** consists of a proximity radar fuze 5E-11, auto-pilot with rudders, radio guidance and missile tracking transponder.

b. **Warhead.** The warhead V-88M (Figure 4.12) consists of directed energy blast fragmentation charge (HE with cumulative effect) with proximity, contact and control fuzes. Weight of warhead with two fuzes is 198 kg. One version, missile V-760 yields a 295 kg nuclear warhead of an estimated 15 Kiloton TNT or a conventional warhead of similar weight.

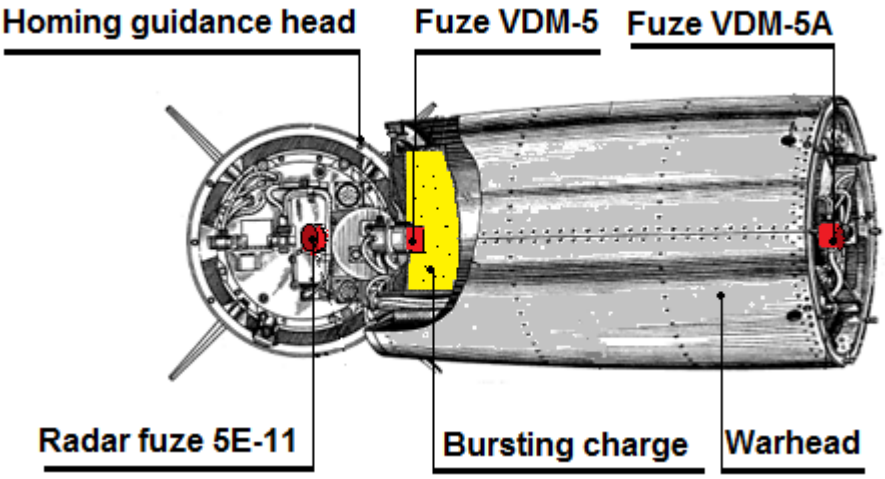

Figure 4.12

c. **Proximity radar fuze 5E-11** in homing head sends an electrical signal to one of the fuzes (VDM-5 or VDM-5A) to initiate the main charge at the most favourable distance. It also provides the self-destruction function.

Fuzes VDM-5 and VDM-5A are electric fuzes with safety device. Safety devices connect the contact of the electric circuit of the VDM-5 and VDM-5A fuzes after launch and also start the self-destruction mechanism.

The arming principle of the fuzes is based on the angular rotation of inserts, which contain the squib (electric detonator). The rotation is driven by the air pressure from Pitot tube. By the rotation the squib moves to the combat position. When armed the VDM-5, VDM-5A is actived by an electric signal from the radar fuze to the squib (electric detonator) that provides the detonating impulse which initiates the main charge.

When the missile misses the target and elapses its flying time, safety devices activate one of the VDM fuzes and causes self-destruction.

d. **Driving unit.** This two-stage missile has:

(1) The large solid propellant booster stage (starting motor) propelled by 607 kg of grain powder.

(2) The core stage consists of a storable liquid propellant sustained rocket engine using 545 kg of inhibited red fuming nitric acid as the oxidizer and 169.5 kg of kerosene as the fuel.

(3) Pyrotechnical cartridges are used to control and switch rocket motors (Figure 4.11). There are several pyrotechnic cartridges PZ-253BM (red) and PP-9RSM filled with 0.6 pounds of pyrotechnic mixture.

0406. ANTI-AIRCRAFT GUIDED MISSILE V-600, V-601 “NEVA/PECHORA”

1. **General description**. Missile V-600 is launched by S-125 Russian surface-to-air missile (SAM) system, NATO code SA-3 “Goa”. The S-125 system began development in 1956 as a low- to medium-altitude complement to the larger S-25/R-113 (SA-1), S-75 (SA-2) and S-200 (SA-5) medium- to high-altitude surface-to-air missile systems. The S-125 using the V-600 missile was first deployed between 1961 and 1964 around Moscow, and in 1964, the improved S-125M Neva-M system entered service. This used the V-601 missile and later the 5V27 and then 5V27V missiles. The export version of the system was designated S-125 Pechora (Figure 4.13).

Figure 4.13

2. **Construction of missiles.** The V-601 (5V27U) missile is medium altitude surface-to-air, two-stage, solid-fuel missile and consists of homing head, radar fuse block, combat part and drive unit (starting motor and flight motor) (Figure 4.14).

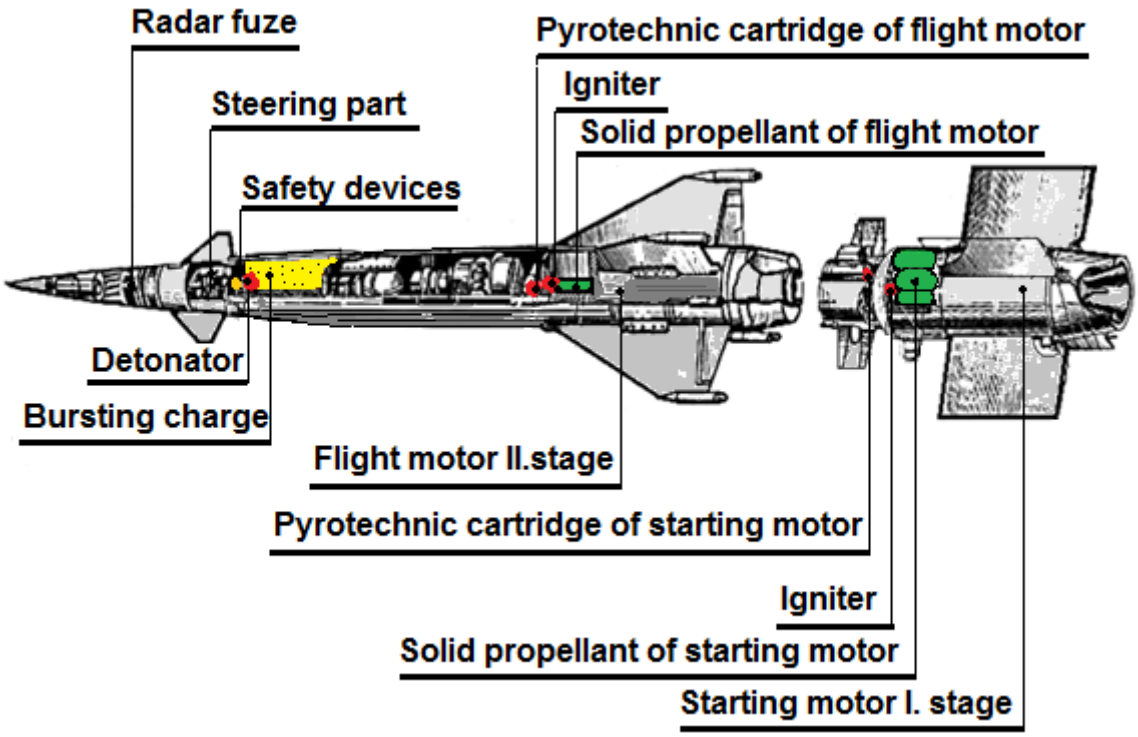

Figure 4.14

a. **Radar fuze 5E15** is an autonomous proximity fuze designed for initiation explosive charge. When the missile approaches within 25 to 30 meters of the target the radar fuze sends an electrical pulse into the safety device circuits.

b. **Warhead 5B18** consists of a HE fragmentation charge, booster with detonator (prime detonator) and safety device. Combat part consists of a surface sheet with shrapnel, charge of explosives and detonator and is designed to have a destructive radius of 25 m. Shrapnel has pyramidal shape and warhead contains of 4,650 pieces (Figure 4.15).

c. **Safety device 5V87** contains electric circuits, mechanical devices, time delay mechanism, electric squibs, detonators and transition detonating fills. It is designed to:

- Protection against false signals being received on the ground or during flight,
- Initiation the warhead,
- Self-destruction- time of self-destruction is 49 sec.

It has three levels of safety:

- First level is unlocked after the launch.
- Second level is unlocked after an acceleration of 18 g.
- Third level is unlocked after the completion of the first stage of the missile.

The basic operating principles is based on the signal from radar fuze which initiates the electric squib followed by the detonators from **safety device**. Detonators transmit detonation wave to **explosive charge** and initiates transmission (prime) detonator.

d. **Explosive charge** The S-125 system uses 2 different missiles versions. The V-600 (or 5V24) had the smallest warhead with 60 kg of High-Explosive and V-601(or 5V27U) with 70 kg HE.

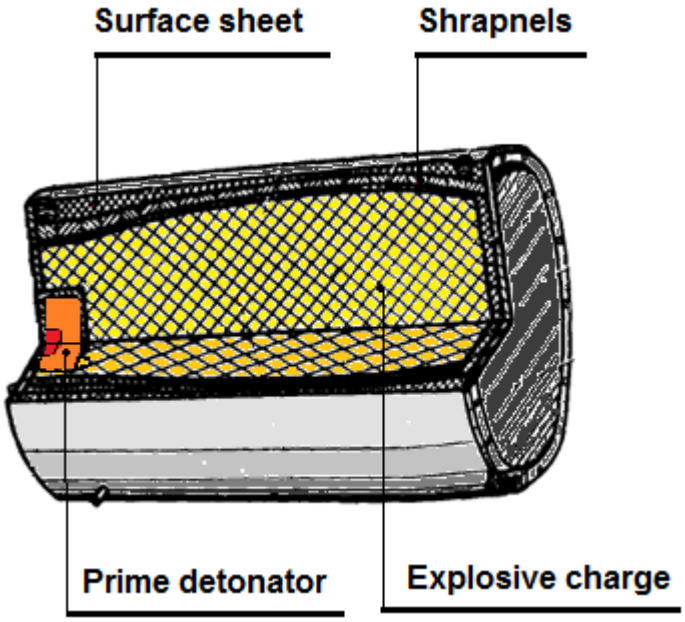

Figure 4.15

e. **Driving unit** consists of large solid propellant starting motor and solid propellant flight motor.
Propellant of starting motor consists of 14 tubular pieces of nitrocellulose powder and pyrotechnic ignition devices.
The flight motor uses high-energetic propellant shaped in one performed tubular form and pyrotechnic ignition devices like starting motor.

0407. **ANTI-AIRCRAFT GUIDED MISSILE 3M8, 9M8 "KRUG"**

1. **General description**. Missile 3M8 later 9M8 is launched by 9K11 launcher. 9K11 is a Soviet mobile, long-range, medium-to-high altitude surface-to-air missile (SAM) system. NATO code SA-4 "Ganef" (figure 4.16). The early version of the Krug entered service in 1965.

The first operational deployment version, the Krug-A, entered service in 1967, with extensively modified versions, the Krug-M in 1971 and the Krug-M1 in 1974, which were developed to rectify problems discovered during army service.

The upgraded version Krug-M was fielded in 1971 and the Krug-M1 in 1974. Missile guidance is via radio command with a terminal semi-active radar homing (SARH) phase.

Figure 4.16

2. **Construction of missiles**. 3M8M missiles is medium-to-high altitude surface-to-air, consists of a guidance radio command, semi active radar, warhead, radio proximity fuze, driving unit and fuel tanks, pressure air tank (Figure 4.17).

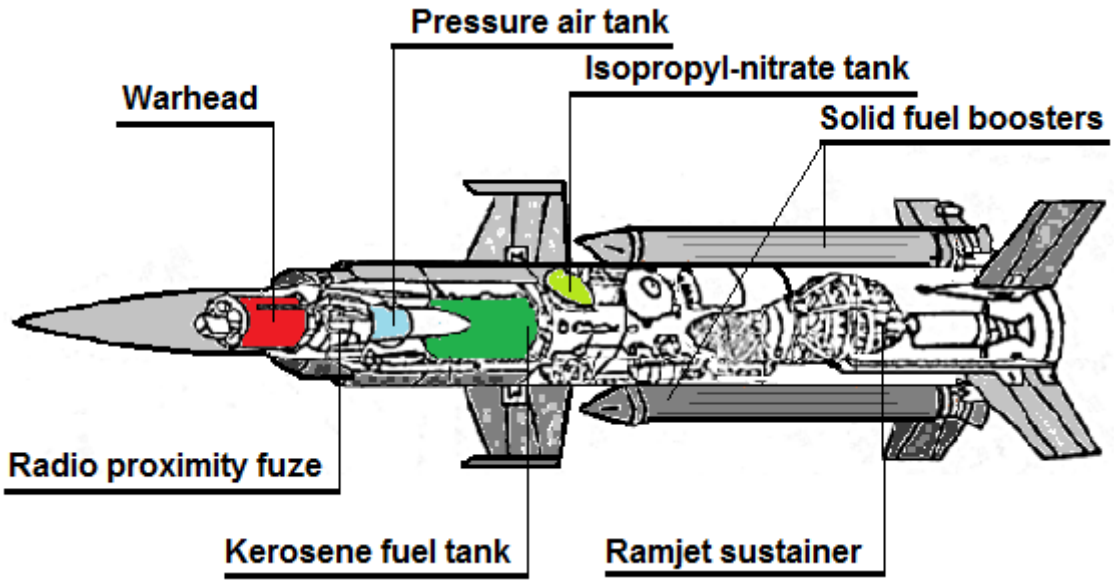

Figure 4.17

a. **Warhead** 3N11 is HE fragmentation and weighs 135 kg (3M8M3 150 kg) and is detonated by a proximity fuse. Number of fragments is 15 000 pcs with a weight of 4 g per pc. Type of explosive is TG-20 (RDX and TNT composition). Weight of explosive 90 kg (3M8M3).

b. **Radio proximity fuze** 3E26 has minimum target altitude 150 metres. The missile is armed 300 meters from the launcher.

c. **Driving unit** consist of a propulsion ramjet sustainer (flight) motor and 4 solid rocket boosters (starting motor). The missiles are launched with the aid of four solid fuel rocket motor boosters attached to the outside of the body missile. Once they have burnt out and the missile is aloft, it fires a liquid-fuelled ramjet sustainer engine. Booster's propellant (4L12M2 nitrocellulose tube) weighs 173 kg. Isopropyl-nitrate ($C_3H_7NO_3$) weighs 22kg and kerosene fuel tank weigh 275 kg.

0408. ANTI-AIRCRAFT GUIDED MISSILE 3M9, 9M3M "KUB/KVADRANT"

1. **General description**. Missile 3M9 is launched by 9K12 anti-aircraft mobile surface-to-air missile system, NATO code SA-6 "Gainful". It is a Soviet low to medium-level tactical air defence missile system, designed to attack aircraft, cruise missiles and attack helicopters at low and medium altitudes. The defence system designed to protect ground forces from air attack (Figure 4.18). Missile 3M9 was entered service in 1966.

Figure 4.18

2. **Construction of missiles.** 3M9M missile is a medium altitude surface-to-air, two-stage, solid-fuel missile and consist of a semi-homing head 1SB4M, combat part 3N12, Steering part, drive unit (starting motor and flight motor) (Figure 4.19).

a. **Warhead 3N12** consists of HE fragmentation warhead with 23 kg TNT, 3000 shrapnel and booster with detonator. Detonation is via a radar proximity fuze and initialization and safety devices.

b. **Steering part** consist of a two channel proximity radar fuze 3E27 with antenna, auto-pilot 1SB6M, initialization and safety devices 9E13 and pneumatic and power system.

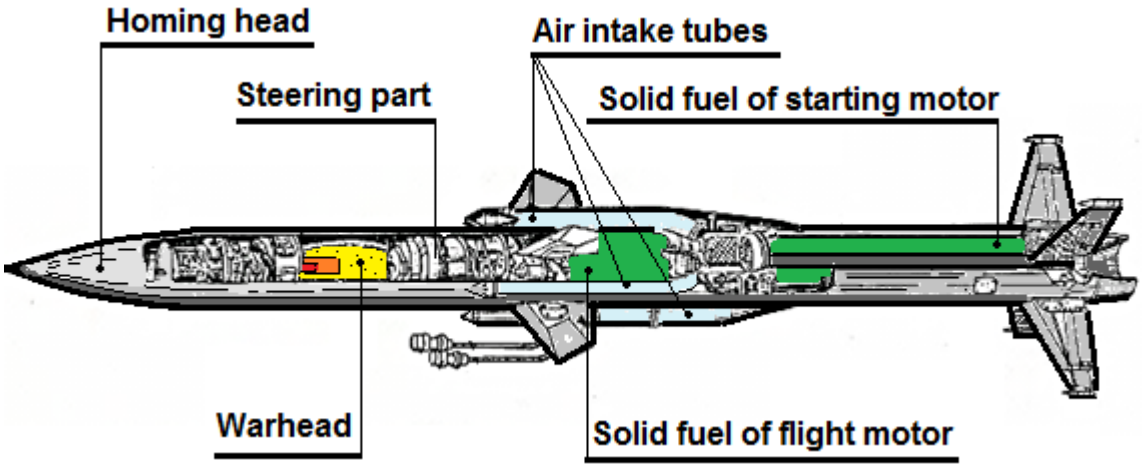

Figure 4.19

c. **Proximity radar fuze 3E27** is armed after some 50 meters of flight and will nominally trigger at a distance of 30m from the target.

d. **Initialization and safety devices 9E13** is contains of:

- Mechanism of first level of protection;
- Mechanism of second level of protection;
- Initialization mechanism with pyrotechnic transmission line and detonator.

e**. Driving unit** has two-stages, ramjet rocket motor with solid propellant. It is consists of a starting (boost) solid propellant motor (172 kg VIK-2 propellant – nitro-glycerine + gun-cotton) and solid reducing propellant flight motor (67 kg LK-6TM – Mg+$NaNO_3$). The motor does not have any oxidizer, oxygen is taken in from the air through the intake tubes.

(INTENTIONALLY BLANK)

CHAPTER 5
ARTILLERY ROCKETS

0501. GENERALLY ON ARTILLERY ROCKETS

1. **Characteristics.** Rocket launchers are weapons that allow rockets to be fired in warfare. Launchers can be either single barrel such as anti-tank weapons (light antitank weapon are sometimes called bazookas) that are used for infantry defence or multi barrelled launchers belonging to the rocket artillery category of weapons.

Multiple barrelled launchers can be designed either with launch tubes or rails and can mounted on trucks. This mobility gave them an advantage in being able to deliver a large barrage all at once, and then moving before being located.

2. **Classification**. Multiple rocket launchers are intended for a short bombardment over a wide area. For example, one salvo (40 shots) from the RM-70 launcher contains 256 kg of explosives, which explodes in the target area in the matter of a few seconds. They are not suitible for point targets because of their wide dispersion. Launchers can also be part of the armament of military aircraft or ships.

They consist of a combat part (warhead), sometimes derived from tube artillery, and a rocket engine with solid fuel. Warheads can be high-explosive, fragmentation or contain submunitions. Representative of this category of weapons are Russian "Katyusha" and "Grad" and the Czechoslovak Multiple rocket launcher „130 mm RM model. 51 ". Artillery rockets are stabilized with wings or by spin, they are not guided. An aerodynamic collar may be fitted to allow for flexibility in elevation and range when firing at close targets, especially when there is intervening terrain such as hills.

0502. ARTILLERY ROCKETS "Katyusha" M-8, M-13, M-30, M-31

1. **General description**. Multiple Rocket Launchers “Katyusha” are a type of rocket artillery first built and fielded by the Soviet Union in World War II that includes BM-8 82 mm calibre, BM-13 132 mm calibre and BM-30 300 mm calibre. Rocket launcher BN-13 had 16 launch rails for 16 rockets of 132 mm calibre (Figure 5.1).

Multiple rocket launchers such as these deliver a devastating amount of explosives to a target area more quickly than conventional artillery, but with lower accuracy and requiring a longer time to reload. They are more sensitive to shocks compared to artillery guns, but are inexpensive and easy to produce. Multiple Rocket Launchers “Katyusha” of World War II were the first self-propelled artillery mass-produced by the Soviet Union and were usually mounted on trucks.

During the period from the 1920s to 1945, Soviets developed variety of rockets including: M-8 82mm rocket; M-13 132mm rocket; M-30 300mm rocket; M-31 300mm rocket (Table 1).

Figure 5.1

Table 1

Type of rocket	M-8	M-13	M-13DD	M-20	M-30	M-31
Drawing	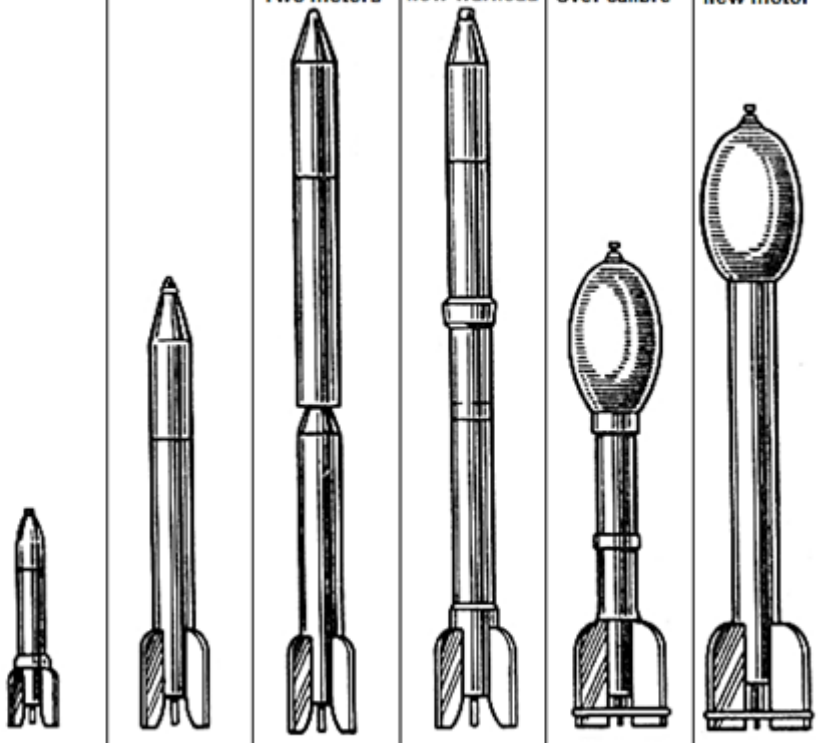		Two motors	New warhead	Over calibre	New motor
Calibre	82 mm	132 mm	132 mm	132 mm	300 mm	300 mm
Weight of explosive	0.64 kg	4.9 kg	4,9 kg	18.4 kg	28.9 kg	28.9 kg

2. **Construction of M-13 rockets** (Figure 5.2). Rocket M-132 mm calibre consists of warhead and rocket engine. The weight of the warhead is 21.3 kg including 4.9 kg explosives. The weight of the rocket engine is 20.8 kg and the mass of the solid fuel varies from 7.05 to 7.13 kg (by batch). The engine is filled with seven-grain pipe solid fuel and 50 g of black gunpowder as an electrical rocket motor primer. There are two pyrotechnic cartridges PP-9. After impact the warhead is initiated by a GVMZ-1 fuze with option settings for instantaneous (fragmentation) effect and time-delayed action (high explosive effect).

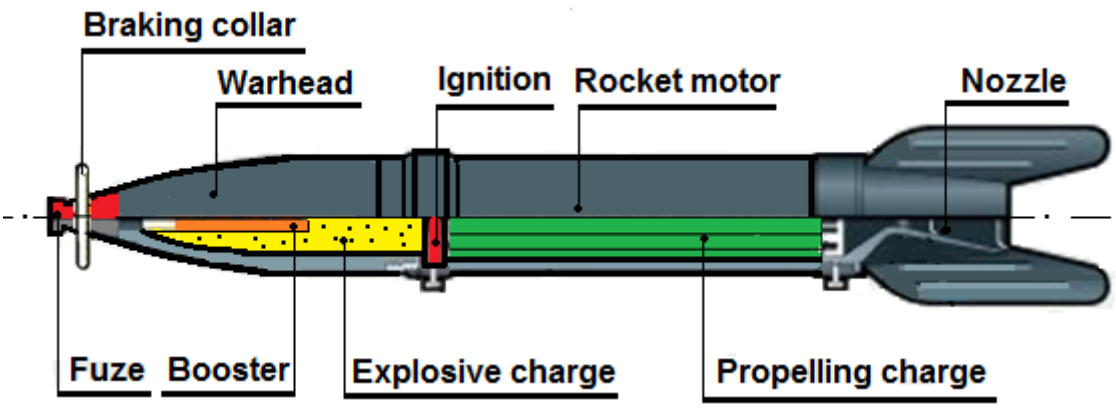

Figure 5.2

0503. **ARTILLERY ROCKETS "130-JRROF-RM 51"**

1. **General description.** RM-130 (model 51) was a multiple-launcher rocket systems 130 mm calibre designed and manufactured in Czechoslovakia (Figure 5.3). It is designed to provide massed fire over a large area. The interior of the launcher tube has no grooves, but four spiral guide ribs. Stabilization of the rocket in flight is achieved by rotation (spin stabilization) of the rocket, at about 16,000 r.p.m.(revolutions per minute). RM-130 can be fired either in a 32 round salve singlely. Selection of salvo fire single is by opening electric triggers. The original model was based on Prague V3S 6×6 truck. Export version used by Austria, based on Steyr 680 M3 6×6 truck; other export variants were based on ZiS-151 and ZIL-157 6×6 trucks. Users of RM/51 were Czechoslovakia, Austria, Bulgaria, Egypt, Romania, and Yugoslavia. MLRS RM-51 use rockets JRROF.

Figure 5.3

2. **Construction of JRROF rocket round** (Figure 5.4). JRROF is standard unguided rotating rocket round of 130 mm calibre intended to destroy infantry, shelters, and combat equipment. The rocket consists of a combat part and motor part. The complete rocket weighs 24. 22 kg.

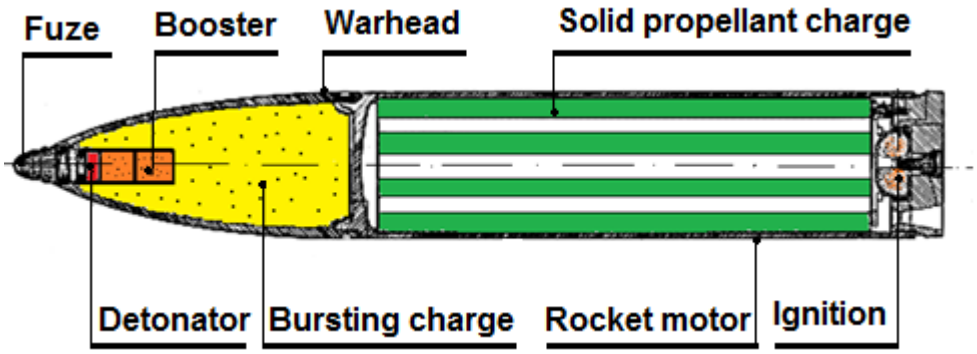

Figure 5.4

a. **Warhead.** The warhead in a steel casing contains the nose Point-Detonating fuze “nz. 60v” or Time-Delay fuze “nz. 62”, a bursting charge and the booster. High-Explosive Fragmentation rocket contain 2.33 kg of cast TNT. Booster is from two cylinders of pressed TNT.

b. **Rocket motor**. The steel body 130 mm JRROR RM-51 spin-stabilised rocket is propelled by a solid propellant rocket motor containing electrically ignited di-glycol based propellant (four powder tubes Dg tp 49x17/430). Rocket motor consists of a combustion chamber with fuel and an electrical rocket primer filled with black powder.

0504. **ARTILLERY ROCKETS “Grad” M-21 OF (9M22)**

1. **Generally description**. The 122mm 40-tube multiple launch rocket system BM-21 Grad (Hail), has a firing range of up to 20 km, and was introduced into operational service with the Russian Army in 1963, and was the most widely used truck-mounted rocket launcher in the Warsaw Pact forces.

The launcher with supporting equipment is referred to as the complex 9K51. This 40-round launcher has four tiers of ten tubes mounted on the chassis of a truck, with a firing range of up to 20 km. Each launch tube is grooved to impart a slow rotary motion to the rocket. However, the rocket is primarily fin-stabilized. This combination of spin and fin stabilization ensures closely grouped fire at ranges of up to 20 kilometres.

The BM-21 (Figure 5.5) can be operated and fired from the cab, or it can be fired remotely at a distance of up to 60 meters, using a cable set. The BM-21 and other 122 mm rocket launchers can fire all 122 mm rockets designed to fit in Soviet-derived 122 mm launchers.

The 122 mm fin-stabilized rockets can deliver Frag-HE, chemical, or incendiary warheads to a range of over 20 kilometres, or the newer HE and cargo rockets out to 30 kilometres. On explosion, the warhead produces a great fragmentation effect and shock wave.

Figure 5.5

2. **Czechoslovakian version RM-70**. The Czechoslovakian Army introduced this new version with the BM-21 launching apparatus mounted on a modified 10-ton TATRA 813 (8x8) truck in 1972 (Figure 5.6). Although the basic launcher is almost identical with that of the Soviet BM-21, the transport vehicle is entirely different. Notable are the armoured cab and the provision for carrying an additional 40 rockets. The reload pack of 40 additional rockets is located between the launcher and the armoured cab, allowing the reload time to be reduced to 1.5 to 3.0 minutes. Although this combination is larger and heavier than the Soviet BM-21 on the Ural-3750 truck, it has the same road speed and a similar cruising range (600 km). It also permits greater tactical flexibility due to the additional rocket supply. This variant, known as the RM-70, entered service in at least Czechoslovakia and East Germany.

Figure 5.6

3. **Construction of M-21OF (9M22) rocket round**. Soviet Union M-21ОФ, rocket round and Czechoslovak version 122-JROF RM-70 (Figure 5.7) are electrically initiated, surface-to-surface, fin- and spin-stabilised rockets. They are used against infantry and manpower, to destroying trenches and shelters and gun positions.

The total weight of the 9M22 at launch is 66 kg. Lengths of the rockets vary between models. The basic 9M22 and the essentially similar 9M22M are 2.87 m long.

The 122 mm 9M22U/DB-1B is 3.226 m long and is heavier, at 77.5 kg. All have a maximum range of about 20,750 m. With the basic 122 mm 9M22, two diameters of aerodynamic spoiler ring (collar) can be fitted over the nose to increase the

accuracy of hit the target. The larger ring is fitted for ranges from 1.4 km to 12 km; small one is from 12 km to 15.9 km.

This rocket consists of fuze, aerodynamic collar (ring), warhead, rocket motor, and stabilizer fins.

M-21 ОФ

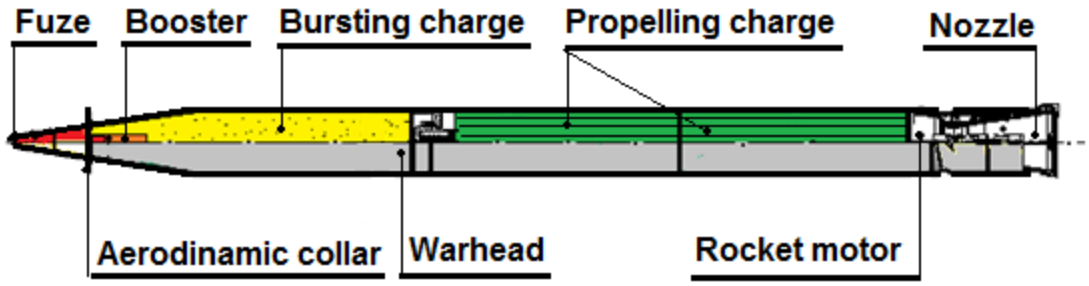

122-JROF RM-70

Figure 5.7

a. **Warhead** containing 6.4 kg of TGAF explosive detonated by a 9A210 or an MPB Point-Detonating (PD) fuze, which is armed by actions of the inertial forces 150 - 400 m after the launch. Other types of warhead can be installed in place of the HE frag, including chemical (VX or Sarin), HE-Incendiary and Smoke.

b. **The rocket motor** consists of 20.5 kg of RSI-12M double-base solid propellant, although single-base propellants have been used in the past.

CHAPTER 6
TACTICAL MISSILES

0601. GENERALLY ON BALLISTIC MISSILES

1. **Characteristics**. A ballistic missile is a surface-to-surface missile that follows a sub-orbital ballistic flight path with the objective of delivering one or more warheads to a predetermined target. To date, ballistic missiles have been propelled during powered flight by chemical rocket engines of various types.

A ballistic missile trajectory consists of three parts: the powered flight portion (boost phase), the free-flight portion which constitutes most of the flight time (cruise phase), and the re-entry phase where the missile re-enters the Earth's atmosphere (descent-terminal phase).

Ballistic missiles can be launched from fixed sites or mobile launchers, including vehicles (transporter erector launchers, TELs), aircraft, ships and submarines. The powered flight portion can last from a few tens of seconds to several minutes and can consist of multiple rocket stages.

2. **Payload**. The payload may be a single cone-shaped warhead or a flat "bus" with several warheads which can each be sent to a different target in the same area. Such a payload is termed a "*multiple independently targetable re-entry vehicle"* (MIRV) system. The nuclear warheads mounted on modern long-range ballistic missiles are usually thermonuclear warheads having yields in the range of several hundred kilotons to several megatons.

3. **Boosters.** The booster rockets of early ballistic missiles were powered by liquid fuels. A liquid-fuel rocket carries fuel (hydrazine, liquid hydrogen, or other) and liquid oxygen in tanks. Liquid fuels are unwieldy, as they must be maintained at low temperatures and may leak fuel or oxygen from tanks, pipes, valves, or pumps and required several hours of above-ground preparation, including fuelling, before they could be launched. Since the late 1950s, ballistic-missile design has concentrated on solid-fuel boosters, which require less maintenance and launch preparation time and are more reliable because they contain fewer moving parts. Solid-fuel rockets contain long, hollow-core casts of a fuel mixture that, once ignited, burn from the inside out in an orderly way, forcing gases out the rear of the rocket.

4. **Classification.** Ballistic missiles can vary widely in range and use, and are often divided into categories based on range. Various schemes are used by different countries to categorize the ranges of ballistic missiles. In the countries of the Former Warsaw Pact classification of surface-to-surface ballistic missiles was as follows:

a. Tactical ballistic , range 30-100 km;
b. Operational ballistic, 200-1,500 km;
c. Strategic ballistic rocket,
   - Short- range 3,000 km;
   - Medium-range 6000-8,000km;
   - Intercontinental above the 8,000 km.

5. **General description.** The first ballistic missile was the A-4, commonly known as the V-2 rocket, developed by Nazi Germany in the 1930s and 1940s under direction of Werner von Braun. In 1948 the first Soviet ballistic missile, R-1 which was essentially a slightly improved copy of the V-2 with a range of 300 km, was tested**.** Almost the same time an elongated variant, the R-2, was developed with double the range, this was tested in 1949. Missiles were launched off ramps with a preparation time to launch of about six hours. "Russian V-2" was in service to the mid-1960s. They could not carry nuclear warheads, but could deliver radiological charges ("dirty bombs"). The peak potential of German technology was represented by the R-5 missile with a range of 1200 km; the R-5 was in use from the beginning of the 1950s. The first test flight took place in March 1953 and within two years the missile entered service, first with a conventional warhead, but soon became the first Soviet missile with a nuclear warhead (Figure 6.1). Generally ballistic missile consists of body, warhead, guiding system (guide beam and radio command receivers, gyro control) fuel and oxidizer tanks, pyrotechnic charges and driving unit. For EOD expert is important warhead with explosive filler, tanks or container with propellant and pyrotechnic charges.

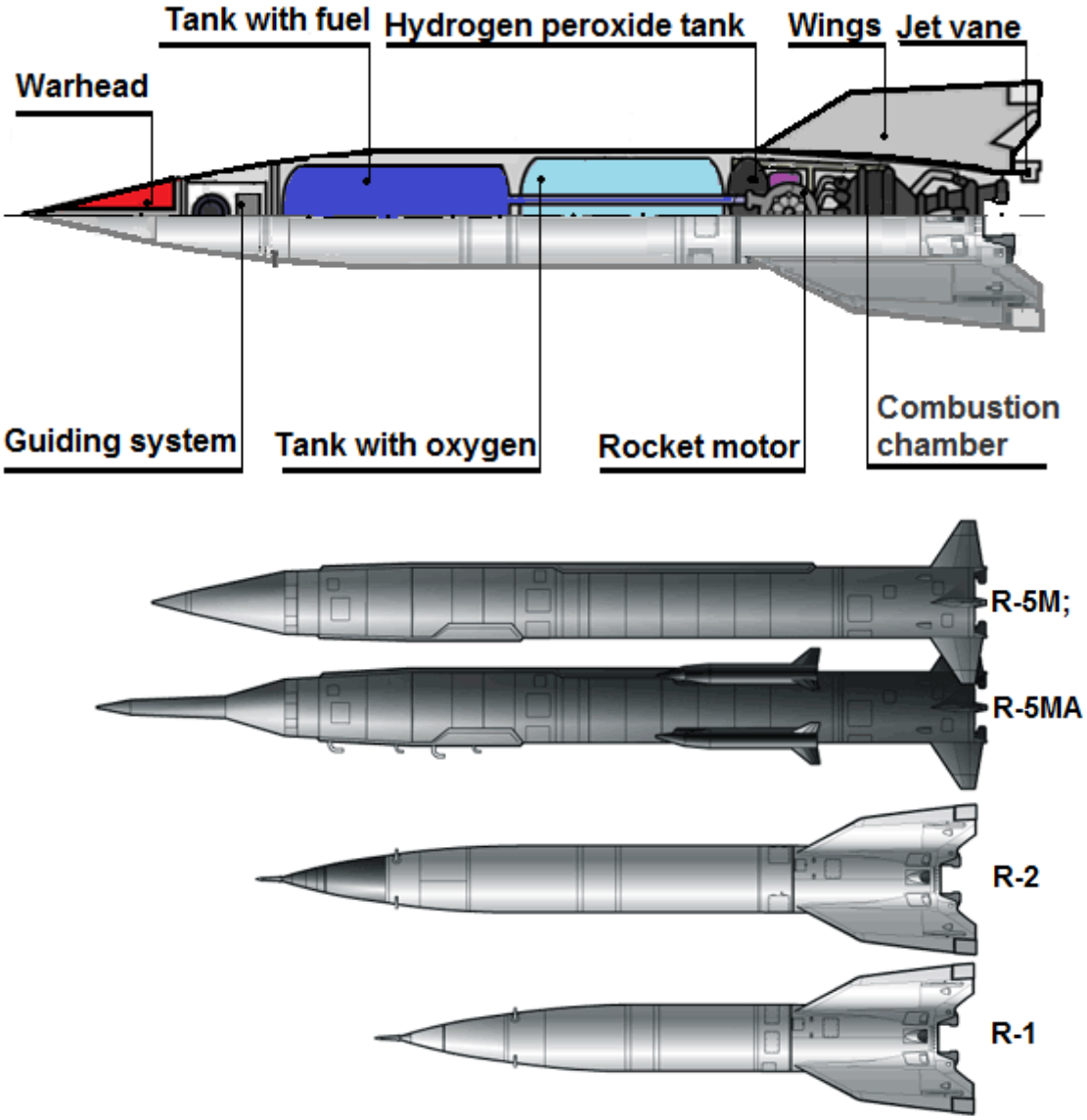

Figure 6.1

0602. TACTICAL BALLISTIC MISSILES 9M21B, 9M21F of 9K52 ROCKETS COMPLEX – LUNA-M

1. **General description.** The 9 K 52 Luna-M is a Soviet tactical short-range artillery rocket system. The 9M21 missiles are unguided and spin-stabilized. Its NATO reporting name is FROG-7. "FROG" is an acronym for "Free Rocket Over Ground". The 9K52 is the latest version and entered the Soviet armed forces in 1965 and re placed older rocket system 2K6 Luna which was known in the NATO code as the FROG-3 and FROG-5.

Figure 6.2

2. **Construction of missile.** (Figure 6.3) The rocket is of conventional single-stage propelled, with a cylindrical warhead of the same diameter as the rocket body. Missile is designed to destroy of manpower and firepower of enemy, combat equipment and mass destruction weapons of enemy. 9M21 missile is standard unguided rocket consisting of a head and the rocket motor. The rocket is stabilized by rotating about the longitudinal axis by the stabilizer wings and the initial action of the rotary motor.

a. **Warhead.** The 9N18F warhead and 9N18OF warhead are HE fragmentation. The warhead 9M21B missile can be equipped with one of three types of nuclear tactical warheads 9N32 AA-22, 9N38 AA-38 and 9N32M AA-52 force 3-200 kt. The 9M21G version was also introduced with a chemical warhead and 9M21K with a cluster head.

b. **Driving unit** consists of a flight, starting and rotary motor.
Propellant weight. Propellant is a solid consistency and it is nitro-glycerine powder. Weight of flight motor propellant is 1090 kg; weight of starting motor propellant is 40 kg and rotary motor is 13 kg.
Pyrotechnic initiators weight. Weight of flight motors pyrotechnics is 3, 85 kg; weight of starting motor pyrotechnics is 0, 87 kg and weight of rotary motor pyrotechnics is 0, 23 kg.

3. **Construction of 9N18F, 9N18OF HE warhead**. The 9N18F warhead is HE fragmentation with cumulative effect (Figure 6.4). The warhead is intended to destroy

the protected and unprotected manpower and combat equipment. Direct hits penetrate reinforced concrete cover to a thickness of 1-2 m by the shaped charge effect. The HE effect of warhead creates a crater of diameter about 12 m and a depth of about 3.5 m. The bursting of the warhead creates 16,000 pieces of fragments. 9N18F warhead consists of body; ballistic cone; impact fuze 9E29. Weigh of warhead is 420 kg. Explosive filling charge consists of 200 kg explosive mixture TG 40/60 (TNT/RDX). The initiation of head is by the 9M29 impact fuze.

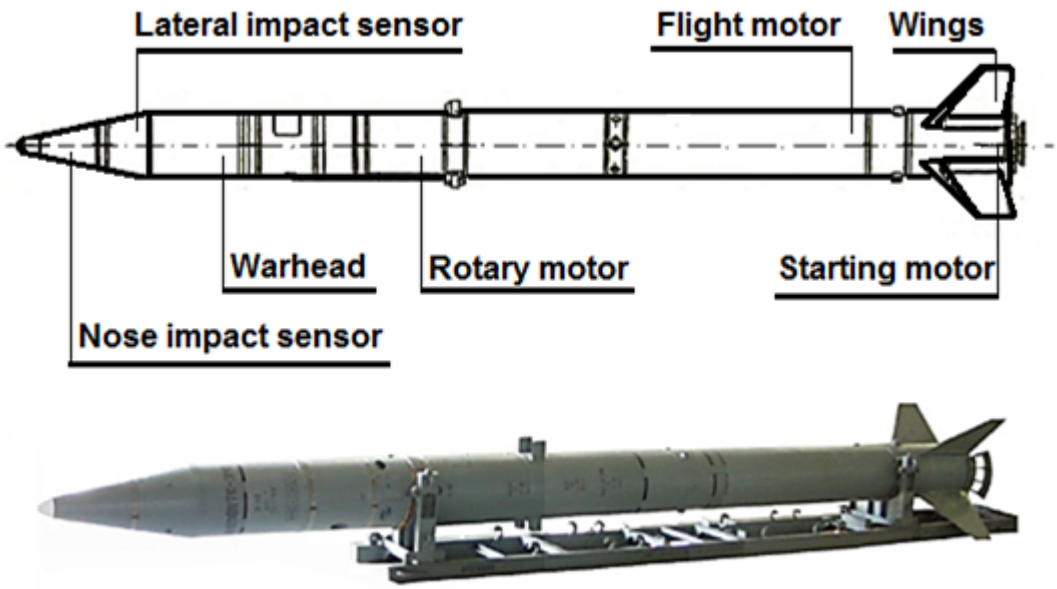

Figure 6.3

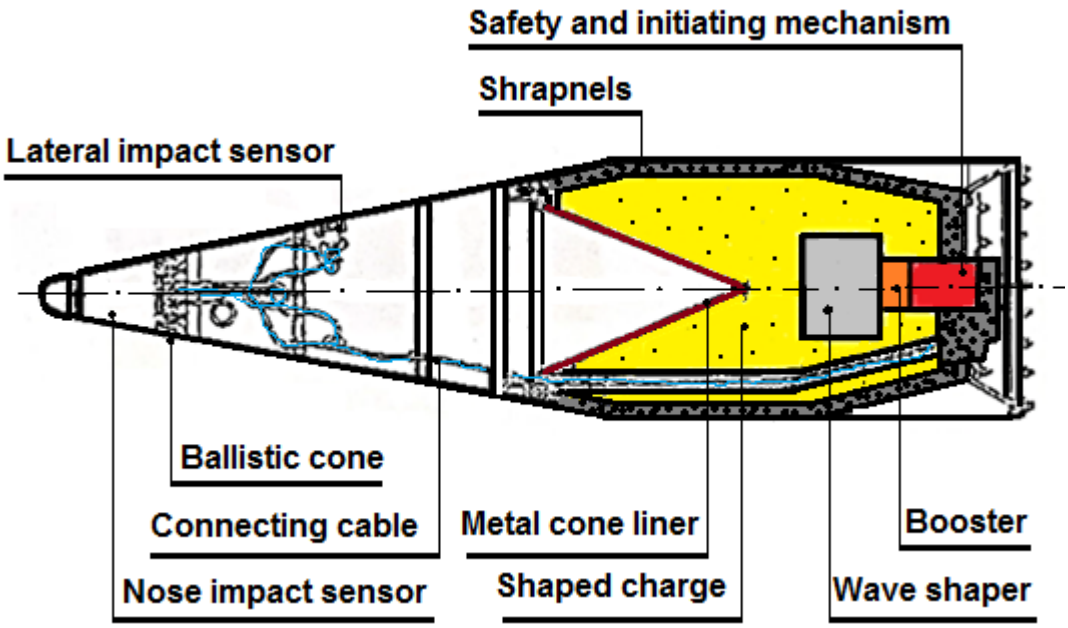

Figure 6.4

a. **9M29 impact fuze**. The 9E29 impact fuze is electromechanical-secured with bore-safe and with the instantaneously reactive and inertial magneto-electric sensors. The 9E29 impact fuze consists of:
   - Nose impact sensor I -153;
   - Four lateral impact sensor I -154;
   - Safety and initiating mechanism I -155.

b. **Nose impact sensor and lateral impact sensors** consists of pulsers (impulse generators), which after the impact sends electrical impulse to the safety and initiating mechanism and initiate detonator.

c. **Safety and initiating mechanism** consists of safety devices, time devices and safety detonator. Safety devices and time devices with clockwork ensure a bore-safe function. The safety detonator ensures safe handling and safe flight up to activation. Activation occurs when acceleration reach 6 g.

NOTE: The 9N18OF warhead (Figure 6.5) is similarly as 9N18F without cumulative effect.

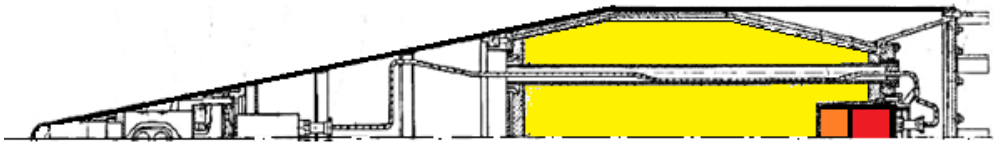

Figure 6.5

4. **Construction of 9N18K cluster warhead**. The 9N18K cluster warhead (Figure 6.6) is designed for destroy the uncovered enemy's manpower and unarmoured equipment by fragments (shrapnel) from the 9N22 submunition. The 9N18K warhead consists of 42 pieces of 9N22 submunition. The 9N18K warhead consists of:
   - Body;
   - Central bursting charge;
   - 9N22 submunition;
   - Safety and initiating mechanism I – 179;
   - Radio sensor 9E320.

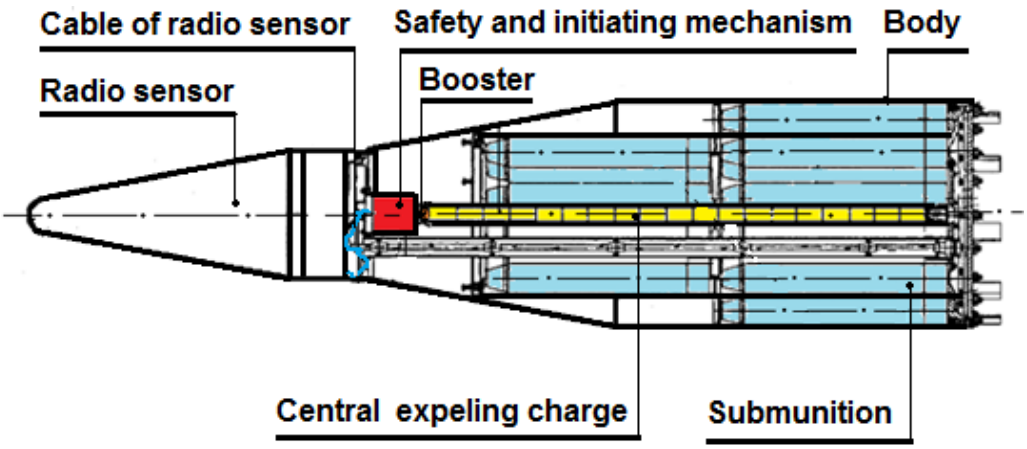

Figure 6.6

a. **Central bursting charge** is designed for openening the body of the warhead and scattering the 9N22 submunitions. Weight of central bursting charge is 2,37 kg. Central bursting charge consists of 12 pieces of TNT.

b. **Construction of 9N22 submunition.** The submunition (Figure 6.7) is designed for destroying unprotected manpower and unarmoured equipment by fragments. Submunition (bomblet) consists of:
   - Thin-walled cylindrical body strengthened by a grooved steel strip;
   - bursting charge
   - 9E237 fuze.

   Weight of cassette is 7, 5 kg. Cylindrical body wrapped with a grooved steel strip which produces 690 pieces of fragments weighing 1–4 grams. Scattering area of submunition from warhead is 0, 1to 0, 25 km^2 if the warhead bursts 1200 m above the ground. Bursting charge weighs 1, 69 kg and is made from A-IX-1 explosive (95% RDX and 5% paraffin wax). 9E237 is nose, impact fuse with device for remote activation and self-destruction. It is mounted in front part of cassette. Stabilizing device is mounted at the rear part of cassette.

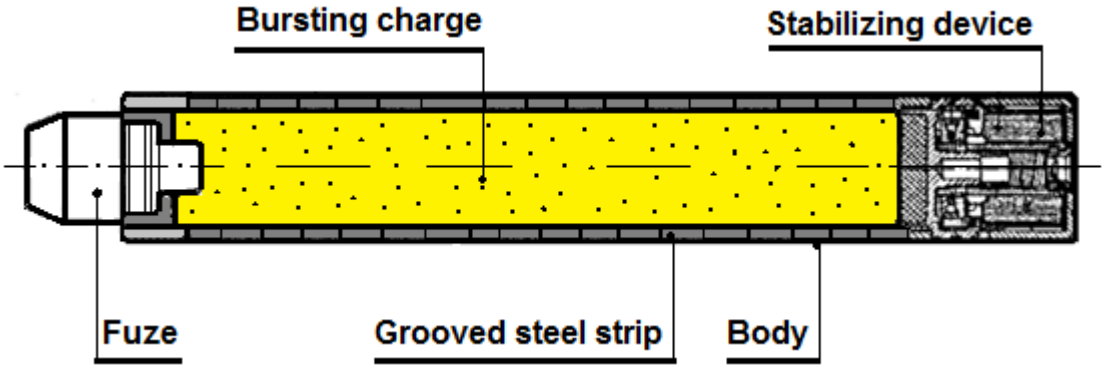

Figure 6.7

c. **Safety and initiating mechanism I – 179** is electromechanical, single-channel with two levels of safety. It is designed for switch supply circuit and combat circuit of radio sensor and to send impulse to booster of central bursting charge. The safety and initiating mechanism ensures safe handling and safe flight up to activation. The first level of safety is activated after launching the rocket. The second level of safety is activated by inertial forces in the initial phase of flight. Safety and initiating mechanism weigh 1, 55 kg and consists of:
   - Setting device;
   - Initiating device;
   - Timing device;
   - Safety detonator

d. **Radio sensor 9E320** is designated to send control signal to safety detonator in the set altitude. The altitude is measured by radar. The weight of radio sensor is 38, 5 kg.

5. **Other LUNA missile warheads.** 9N18G is a warhead with a 216 kg chemical agent (VX persistent nerve or other agents), and 36 kg explosive and 9N18A is agitation warhead carrying 4.5 kg propagandistic leaflet.

0603. TACTICAL BALLISTIC MISSILES 9M79 of 9K79 ROCKET COMPLEX – TOCHKA

1. **General description**. The 9M79 "Tochka" is a single-stage, short-range, tactical-ballistic missile and was developed in 1972. Complex 9K79 (Figure 6.8) entered service in the Soviet armed forces in 1973.

This complex is intended to defeat the most important enemy objects such as nuclear strike means, missile launch positions, airfields, command posts, anti-aircraft units, artillery batteries, and other small size targets with a precision fire.

The complex consists of one solid fuel, single stage missile with inertial guidance system. This missile complex was designated by NATO as SS-21 "Scarab-A".

Figure 6.8

2. **Construction of missile.** (Figure 6.9) Missile is can use three type of warheads, nuclear 9M79B with an adjustable power in 10 - 100 ktons, high-explosive fragmentation 9M79F missile with 9N123F warhead and 9M79K missile with cluster 9N123K warhead. Other variants are 9M79M1 "Tochka-U" (SS-21 Scarab B) introduced in 1989 and Scarab C was developed in the 1990s. The all improvements are relating mainly to increasing the amount of propellant. It allows range from 120 km to 185 km.

The basic warhead is the 9N123F HE-Frag warhead. The 9N123K warhead can probably carry either submunitions or mines. The SS-21 can also carry the AA60 tactical nuclear warhead and are believed to include chemical and terminally guided warhead.

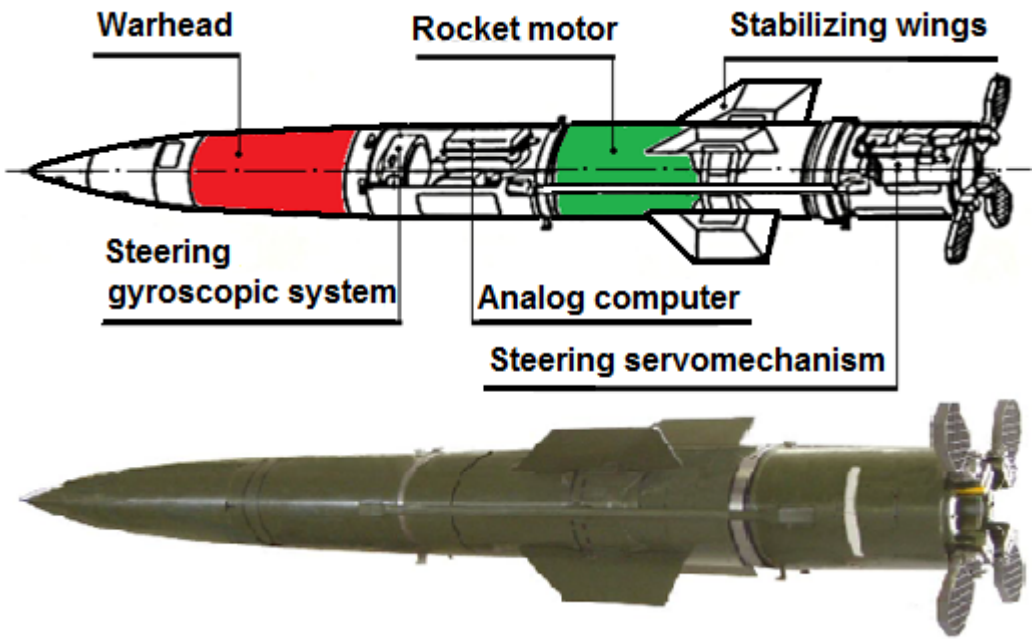

Figure 6.9

3. **Construction of 9N123F HE warhead.** The 9N123F is a HE concentrated fragmentation warhead (Figure 6.10). The warhead is designed to destroy targets by fragmentations and blast. 9N18F warhead consists of:

- Body with explosive and fragments;
- Proximity fuze 9E118;
- Two impacts sensor 9E128;
- Safety and initiating mechanism 9E117

Weigh of warhead is 482 kg.

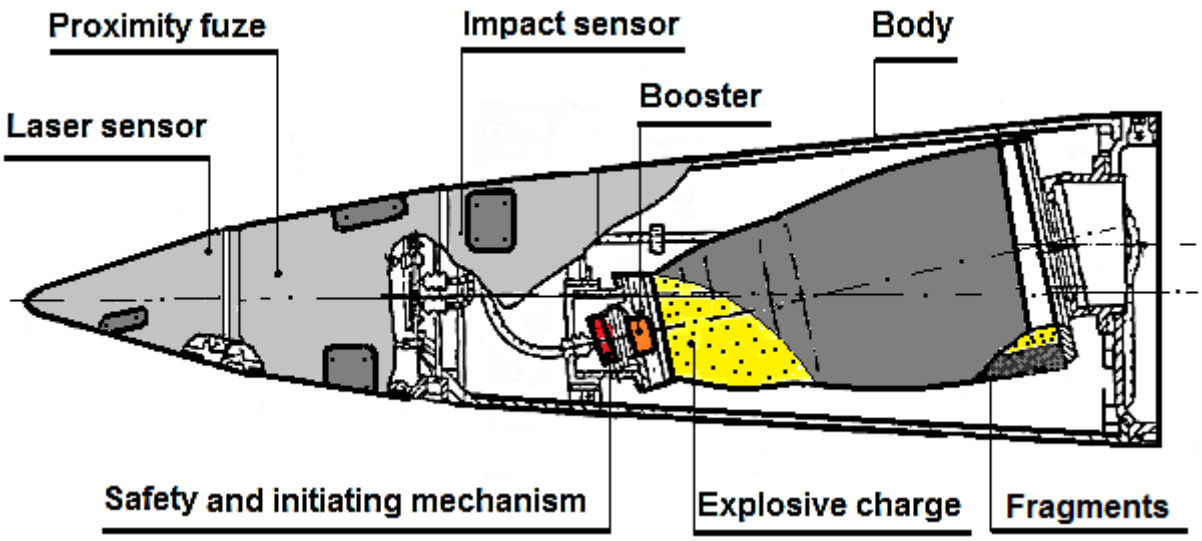

Figure 6.10

a. **Body** of warhead is filled with explosive and fragments. Explosive filling charge consists of 162.5 kg of high explosives. The bursting of the warhead creates 14, 500 pieces of fragments (6,000 pieces with weight of 20.8 g; 4,000 pieces with weight of 10 g and 4,500 pieces with weight of 5.47 g.

b. **Proximity fuze 9E118** is designed to send switching command for explosion of warhead when the missile is 15 m above the ground and at 450 m above the ground send an impulse to turn missile at the incidence angle of 80° to improve the effect of explosion. Proximity fuze consists of:

- Two altitude sensors, one other independent;
- Radio sensor to turn missile at the incidence angle;
- Laser sensor to send switching command.

c. **Impacts sensor 9E128** is impulse magneto-electric generator. It is designed to send electric impulse to **safety and initiating mechanism** if the missile hits the target and the proximity fuze fails. The electric impulse activates an electric detonator.

d. **Safety and initiating mechanism 9E117** is electromechanical with two levels of safety which under the signal from proximity fuze or impact sensors produce detonation impulse to initiation explosive charge. The safety and initiating mechanism ensures safe handling and safe transport up to activation. The first level of safety is deactivated after rocket launch. The second level of safety is deactivated in the descending phase of flight. Safety and initiating mechanism consists of**:**

- Safety actuation mechanism of first and second levels;
- Switch over mechanism;
- Initiation circuit.

Integral part of safety and initiating mechanism is the booster, electric detonator and two squibs.

4. **Construction of 9N123K cluster warhead** (Figure 6.11). The warhead is designate to destroy the target by fragments from submunitions (bomblets). 9N18K warhead consists of:

- Body
- Central bursting charge
- Submunition 9N24;
- Safety and initiating mechanism 9E117
- Radio sensor 9E326

Weigh of warhead is 482 kg.

a. **Body of warhead** is filled with central bursting charge and 50 9N24 submunitions.

b. **Central bursting charge** is designed to open the body of the warhead and scatter the 9N24 submunition. Weight of central bursting charge is approximately 2,5 kg.

c. **Construction of 9N24 sumbunition** (Figure 6.7) is similar to 9N22 submunition which is used in 9M21 missile - Luna, except weight of bursting charge. The central bursting charge consists of 19 TNT cylinders. Weight of bursting charge is 1.45 kg high explosives.

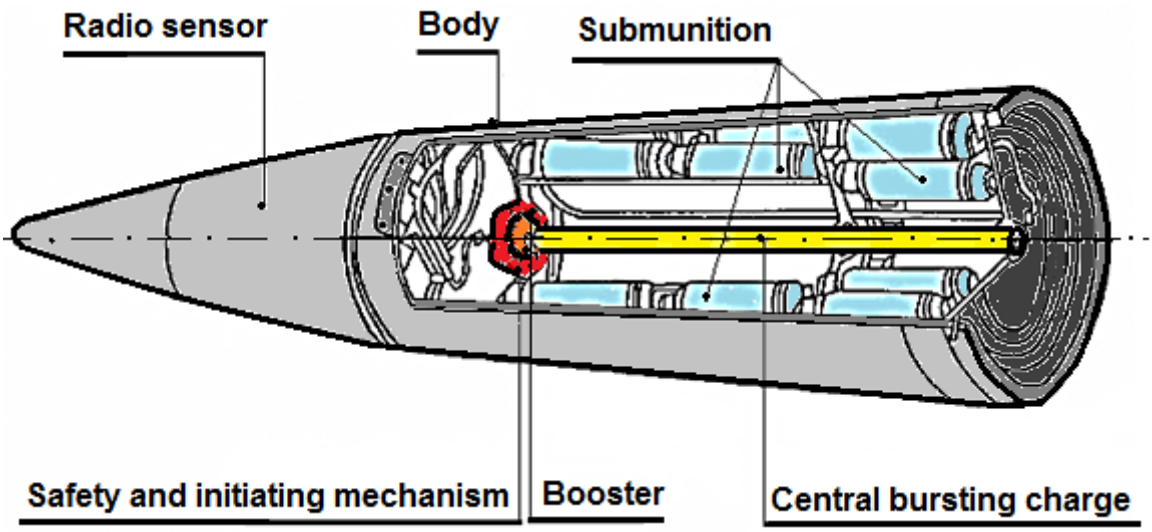

Figure 6.11

d. **Safety and initiating mechanism 9E117** is the same as in 9N123F warhead. However exist one difference, signal for activation is received from radio sensor, not from proximity fuze.

e. **Radio sensor 9E326** 2,250 m above the ground (by surface reflection) sends electric signal to safety and initiating mechanism

5. **Driving unit.** Drive unit is a single-stage solid rocket motor. The solid propellant filler 9CH151 contains DAP-15V (Ammonium Perchlorate and rubber with the addition of Aluminium powder). Weigh of flight motor is 1518 kg and weigh of rocket motor propellant is 909 kg. Rocket motor includes 2 pieces of 15CH226 pyrotechnic charge with net explosive quantity (NEQ) 0,00245 kg each and propellant igniter 9CH249.

CHAPTER 7
OPERATIONAL MISSILES

0701. OPERATIONAL BALLISTIC MISSILES 8K14 of 9K72 ROCKET KOMPLEX - ELBRUS

1. **General description.** Operational missile 8A61 “Zemlya” NATO code SS-1 SCUD-A and 8K14 “Elbrus” (rocket complex 9K72) NATO code SS-1B SCUD-B was a Soviet medium range ballistic missile designed to strike at targets as marshalling areas, major storage dumps and airfield behind the enemy lines. It was the first of several similar Soviet missiles to be given the reporting name Scud (8A61, 8K11, 8K14-1) (Figure 7.1).

All missiles are single stage operational ballistic guided missile. Missiles 8A61 are the same as 8K11 except rocket engine. Missiles SS-1 - SCUD-A have been in service since 1955. Further developed variants were the 9K72- Elbrus / SS-1c Scud-B in 1962 and the SS-1d Scud-C in 1965.

The first combat use of the Scud occurred in 1973 in the Arab-Israeli Yom Kippur War. The missile programme of Pakistan, Iraq, Libya, Iran and North Korea have been reported to use technology from Russian Scud systemsto produce battle-field missiles capable of reaching up to 1,500 km in range.

Figure 7.1

2. **Construction of missile.** Missile consists of warhead, avionics (Guidance Assembly), and tank with fuel, driving unit and stabilizing wings (Figure 7.2).

The missile’s propellant is a liquid consistency and consists of fuel and oxidizer. The fuel mixture consisted “Kerosene” (Scud A). Improved fuel (Scud A-D) consisted of “Unsymmetrical Dimethyl Hydrazine (UDMH)”. The oxidizer consisted of “Nitric Acid” and improved oxidizer is “Red Fuming Nitric Acid (RFNA)”. It consists of 84% nitric acid (HNO3), 13% di-nitrogen tetroxide and 1-2% water. Total amount of propellant is about 3,130 kg. The oxidizer and accompanying oxides of nitrogen were dangerous in their own right and caused a range of symptoms in people exposed on the ground. They can cause deep and painful burns on the skin or in the lungs. When inhaled, the oxidizer and its nitrogen oxide decomposition products can produce im-

mediate or delayed symptoms including throat dryness, cough, headache, dizziness, anxiety, extreme fatigue, nausea, vomiting, chest pain, laboured breathing, inflammation of the lungs, choking, fluid build-up in the lungs, and suffocation, depending on the extent of exposure. Kerosene is not particularly toxic.

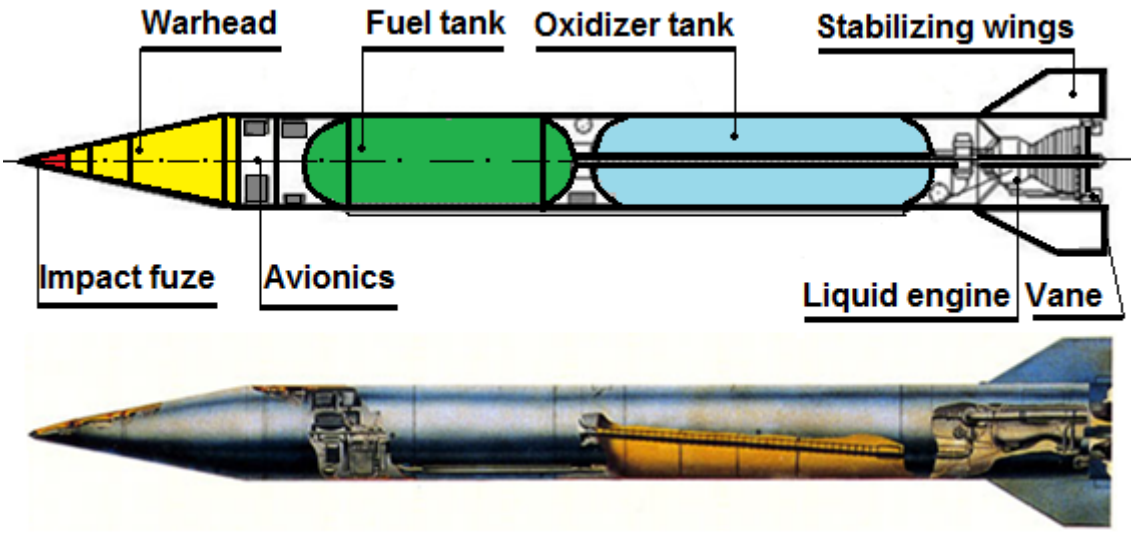

Figure 7.2

a. **Construction of warhead.** The warhead forms the nose section of the missile and weighs 985 kg**.** The missiles were originally designed to carry nuclear or conventional warheads, with ranges from 50 to 300 km. Its principal threat was the potential that its could hold chemical or biological agents.

b. **The conventional warhead** (Figure 7.3) is from a family of 8F44 non-nuclear warheads and was developed mainly to arm export missiles. The 8F44F was high-explosive warhead and typical damage is crater from 1, 5 meters to 4 meters deep and 12 metres wide. The conventional warhead was developed, including blast/fragmentation, earth penetrations, fuel-air explosive and submunition. The high-explosive warhead is filed with 545 kg explosive mixture TGAG-5. The 8F44K “Kasetka” was the submunition warhead. There were again several options, including fragmentation, armour-piercing, runway penetrators, smoke, mines or incendiary. The submunition warheads would all have been initiated by proximity fuze, to create an air-burst to deploy the submunition over a wide area. Warhead contains about 100 pieces of fragmentation submunition, each weighing 5 kg and with 1, 2 kg of explosives and a damage radius between 160 and 250 metres or about 42 pieces of run-way penetrators, each weighing 12 kg and with 3 kg of explosive. Initiations of warhead are by initiating devices 8B117 consisting of:

- Nose contact fuze 8V11101;
- Barometric block 8N00703;
- Base fuze 8V11702 with two main detonators 8V11104.

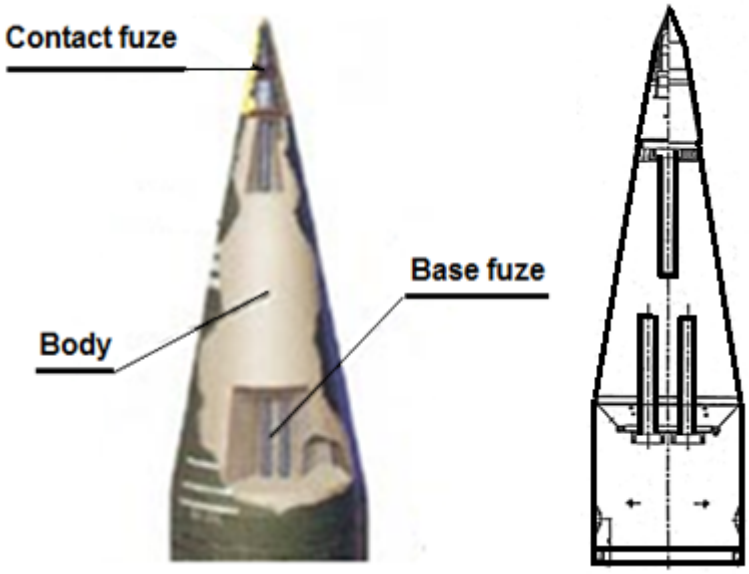

Figure 7.2

c. **The chemical warhead** was designated as 8F44GI (8F44G) Tuman-3 and was filled with chemical warfare agent VX. Dispersion chemical substance was caused by an air blast and to cover the area with a length of up to 4000 meters and a width of 600 meters. At the front part of warhead was a nose fuze with a high-explosive bursting charge to open the warhead and allow dispersal of the chemical agent and creation of a dense aerosol cloud.

d. **The nuclear warhead** type 8F14 (5-15 kiloton) and 9N33 (10-100 kiloton) weighs 989 kg. The nuclear warhead had its own internal heater to maintain optimum internal temperature of the head. For comparison, in Figure 7.3 are shown warheads 8F14, 9N33, and 8F44.

e. **The submunition warheads** used a proximity fuze instead of an impact fuze.

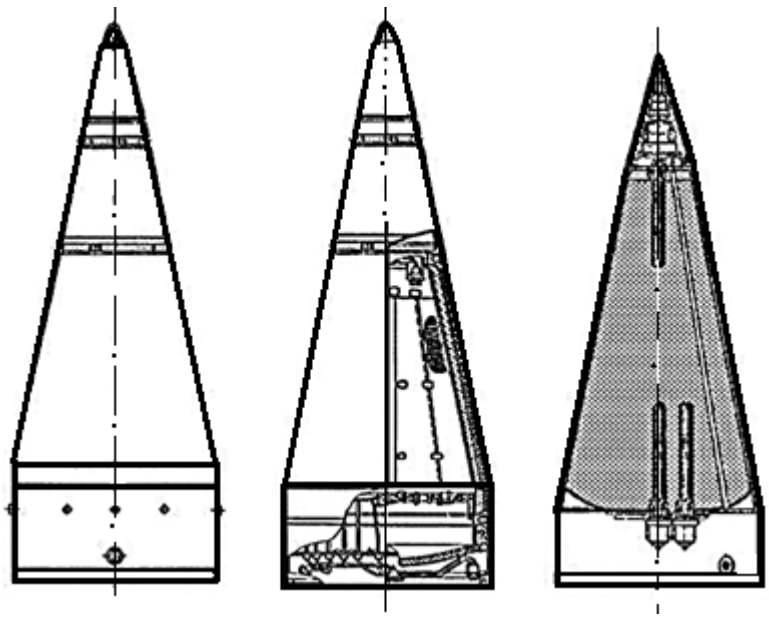

Figure 7.3

0702. **OPERATIONAL BALLISTIC MISSILES 9M714 of 9K714 ROCKET COMPLEX - OTR 23 OKA**

1**.** **General description.** The OTR-23 Oka was a mobile highly accurate, fully automated second generation ballistic missile system. It was deployed by the Soviet Union near the end of the Cold War to replace the obsolete SS-1C 'Scud B' and was assigned the NATO reporting name SS-23 Spider. Maximum range is 500 km (Figure 7.4). The system was fully capable of disabling opposing missile systems, command centres and airfields.
Rocket complex can use missiles 9M714B, 9M714F, 9M714K.

Figure 7.4

2. **Construction of missile**. Missile consists of warhead, steering system, rocket motor with solid fuel, and steering servomechanism (Figure 7.5). The missile 9M714 (1976) is the basic model of the missile.

The 9M714F missile with high explosive and/or penetrating warhead weighting 450 kg and possesses a maximum range of 450 km.

The 9M714K missile with a cluster warhead 9N74K weight 715 kg and possesses a maximum range of 300 km.

The 9M714B missile is armed with the AA-60 (9N63) nuclear warhead and possesses a maximum range of 500 km. The 9M714B1 missile is armed with a thermonuclear warhead.

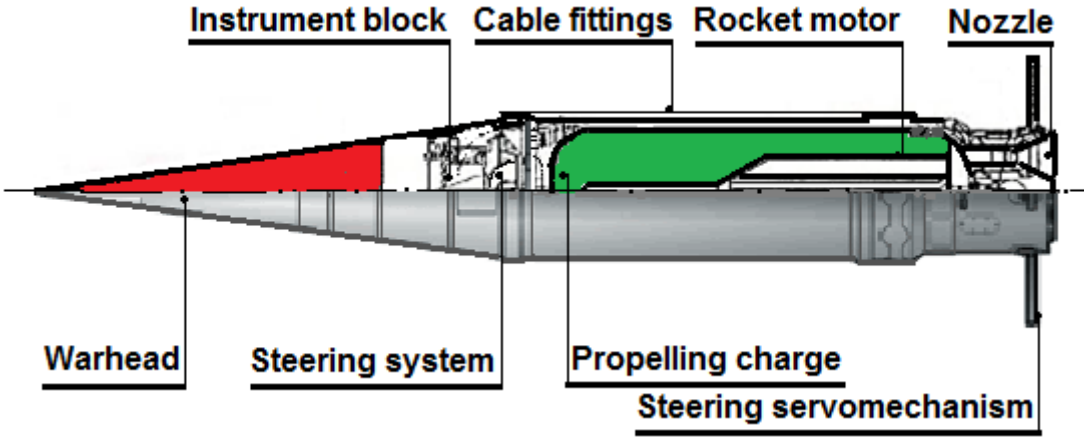

Figure 7.5

a. **Construction of warhead.** Warhead can be HE fragmentation, submunition, or nuclear. The weight of the payload varies between 372 and 772 kg depending on the type of warhead.

The 9M714B missile armed with a 9N63 nuclear warhead weighing 372 kg (100 Kiloton).

The 9M714F missile armed with a FRAG-HE warhead weighing 450 kg(Figure 7.6).

Figure 7.6

The 9M714K missile armed with a cluster warhead 9N74K weighing 715 kg and featured 95 charges (Figure 7.7). Cassette 9N74K (rocket 9M714K) with cluster munitions 9N224 comprising 95 high-explosive submunitions 9N225 (weight - 3.84 kg, the mass of explosives - 0.64 kg, dimensions - 328 x 64 mm made 300 pieces

weighing 5 g), central 9H313 charge (sometimes written 9CH313) combined fuze 9A253, a split bomblets 9CH59, backup fuse 9A133, 9B246 electric battery (voltage 28.5 volts) and altimeter 9A333-1.

Transportation and storage is in 9YA251 containers. Cluster warheads available for export may not carry decoys and are probably equipped with high explosive submunitions 9N225.

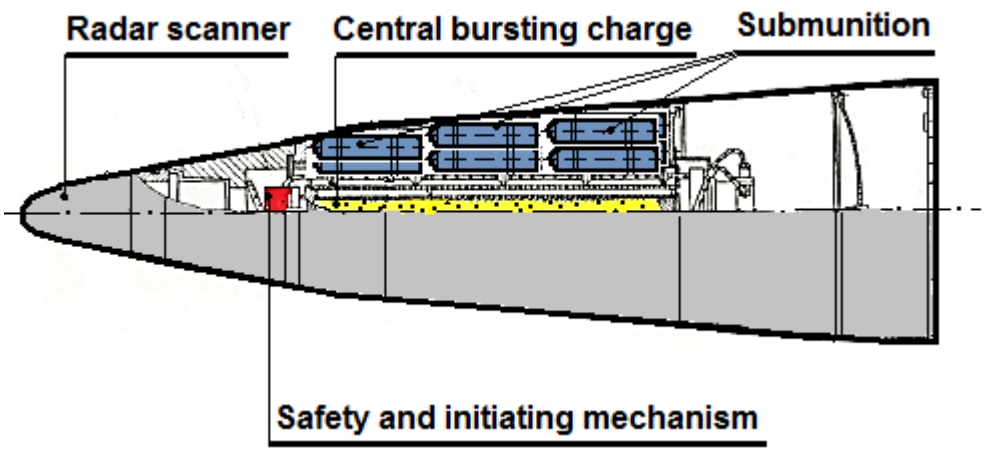

Figure 7.7

b. **Driving unit.** Driving unit is single-stage solid propellant rocket motor. Weight of propellant charge is 2 940 kg.

REFERENCES

Speciální technika, I diel, FMVS Praha 1976;
/„Special technique“, VOL I, FMVS 1976/.

Vojenský predpis Del-21-1, „Komplet 9K52, rakety 9M21Б, 9M21Ф, 9M21E “, MNO Praha 1969;
/Military publication Del-21-1 „Complete 9K52, Missiles 9M21Б, 9M21Ф, 9M21E *“MOD Prague 1969 /.*

Vojenský predpis Del-21-2, „Pancierovka 27“, MNO Praha 1956;
/Military publication Del-21-2 „Anti-tank weapon No.27“ MOD Prague 1956 /.

Vojenský predpis Del-21-3, „Tarasanica 21“, MNO Praha 1957;
/Military publication Del-21-3 „Bazooka No.21“ MOD Prague 1957 /.

Vojenský predpis Del-21-10, „Pancierovka RPG-7“, MNO Praha 1967;
/Military publication Del-21-2 „Anti-tank weapon RPG No.27“ MOD Prague 1967/.

Vojenský predpis Del-21-26, „68 mm Reaktívny protitankový graná vz. 75 (RPG-75) “, MNO Praha 1982;
*/Military publication Del-21-26 „*68 mm Reactive anti-tank grenade *No.75“ (RPG-75) MOD Prague 1982/.*

Vojenský predpis Del/F-21-1, „Rakety 9M79F,9M79K a 9M79B “, MNO Praha 1986;
/Military publication Del/F-21-1, „Rockets 9M79F, 9M79K a 9M79B” MOD Prague 1986/.

Vojenský predpis Del/F-21-9, „Trieštivá kazetová hlavica 9N123K “, MNO Praha 1986;
/Military publication Del/F-21-9, „ Warhead with 9N123K fragmentation submunition” *MOD Prague 1986 /*

Vojenský predpis Del-22-71, „130 mm Raketomet vz. 51“, MNO Praha 1985;
/Military publication Del-22-71 „Rocket launcher No.51“ MOD Prague 1985 /

Vojenský predpisy Del-24-54, Del-24-55 „Komplet 9K11- Protitanková riadená strela 9M14M“, textová a obrazová časť, MNO Praha 1986;
/Military publications Del-24-54, Del-24-55 „Complete 9K11 – Anti-tank guided missile 9M14M “ text and pictorial part, MOD Prague 1986/.

Vojenský predpisy Del-24-11/1, Del-24-11/3 „122 mm raketomet vz 70.“, textová a obrazová časť, MNO Praha 1971;
/Military publications Del-24-11/1, Del-24-11/3 „122 mm rocket launcher No.70 “ text and pictorial part, MOD Prague 1971/.

Vojenský predpisy Del-24-51, Del-24-52 „Prenosný protitankový komplet 9K11“, textová a obrazová časť, MNO Praha 1966;
/Military publications Del-24-51, Del-24-52 „Portable Anti-tank complete 9K11 “ text and pictorial part, MOD Prague 1966/.

Vojenský predpis Del-24-92 „Prenosný raketový Komplet 9K111“, textová a obrazová časť, MNO Praha 1980;
/Military publication Del-24-92 „Portable complete 9K111- Anti-tank guided missile 9M111-2 “ text and pictorial part, MOD Prague 1980/.

Vojenský predpis PVOV/B-22-5 „Raketa 3M9M-technický popis“ MNO Praha 1980;
/Military publication PVOV/B-22-5 "Rocket 3M9M- technical description" MOD Prague 1980/;

Vojenský predpisy PVOV/B-22-26, PVOV/B-22-27 „Raketa 3M9M3E- technický popis a obrazová časť“ MNO Praha 1985;
/Military publications PVOV/B-22-26, PVOV/B-22-27 "Rocket 3M9M3E- technical description and pictorial part" MOD Prague 1985/;

Vojenský predpis PVOV-23-5 „Raketa V-755- technický popis “ MNO Praha 1973;
/Military publication PVOV-23-5 "Rocket V-755- technical descriptiont" MOD Prague 1973/;

Vojenský predpis PVOV-23-6 „Raketa 5Ja23- technický popis a obrazová časť“ MNO Praha 1990;
/Military publication PVOV-23-6 "Rocket 5Ja23- technical description and pictorial part" MOD Prague 1990/;

Vojenský predpis PVOV-23-11/1„Raketa 5V27U- technický popis “ MNO Praha 1974;
/Military publication PVOV-23-11/1"Rocket 5V27U - technical description t" MOD Prague 1974/;

Pomôcka „ Prenosný protilietadlový reaketový komplet 9K38 IGLA“ Štáb pozemného vojska GŠ Armády SR Trenčín 1998;
/Handbook „ Portable anti-aircraft missile complete 9K38 IGLA“ HQ Land Forces Army of Slovak Republics, Trenčín/.

Наставление советской армии „Боевые Машины БМ - 13Н, БМ - 13НМ, БМ - 13НММ“, МОССР, Москва;
/Manual of the Soviet Army "Battle Machines BM - 13H, BM - 13NM, BM - 13NMM" MOD USSR, Moscow/;

Наставление советской армии „Управляемый снаряд 9М14, 9М14М“ МОССР, *Москва 1966;*
/Manual of the Soviet Army "guided missiles 9M14, 9M14M" MOD USSR, Moscow, 1966/;

Наставление советской армии „Переносный противотанковый комплекс 9 К111“, МОССР, Москва 1975;
/Manual of the Soviet Army "Portable Anti-Tank complex 9 K111", MOD USSR, Moscow 1975/;

Техническое описание и инструкция по эксплуатации „Снаряд 9М-111-2“, МОССР, Москва 1975;
/Technical description and user's guide "Missile 9 M-111-2", MOD USSR, Moscow 1975/;

Техническое описание и инструкция по эксплуатации „Ракета 8К14“, МОССР, Москва;
/Technical description and user's guide "Missile 8K14 ", MOD USSR, Moscow 1975/;

(INTENTIONALLY BLANK)

ANNEX B: TECHNICAL PARAMETERS OF THE SELECTED FWP AMMUNITIONS

The ammunitions list:

Annex	Original short name	English description	Page
B-1	Nb-P27	45 mm (112 mm) Separate Cartridge High Explosive Anti-Tank	2
B-2	Nb-T21	82 mm (85 mm) Fixed Cartridge High Explosive Anti-Tank	4
B-3	ПГ-7В	85 mm Separate Cartridge High Explosive Anti-Tank with Tracers	6
B-4	RPG-75	68 mm Fixed Cartridge High Explosive Anti-Tank	8
B-5	3M6	136 mm High Explosive Anti-Tank Guided Missile	10
B-6	9M14M	125 mm High Explosive Anti-Tank Guided Missile	12
B-7	9M14P1	125 mm High Explosive Anti-Tank Guided Missile	14
B-8	9M111	120 mm High Explosive Anti-Tank Guided Missile	18
B-9	9M111M	120 mm High Explosive Anti-Tank Guided Missile	22
B-10	9M113	135 mm High Explosive Anti-Tank Guided Missile	26
B-11	9M113M	135 mm Tandem High Explosive Anti-Tank Guided Missile	30
B-12	9M117 (3UBK10-1)	100 mm High Explosive Anti-Tank Guided Missile	32
B-13	9M37, 9M333	120 mm High Explosive - Anti-aircraft Fragmentation Guided Missile	36
B-14	9M32, 9M32M	72 mm High Explosive – Anti-aircraft Fragmentation Guided Missile	38
B-15	9M313, 9M39, 9M342	72 mm High Explosive - Anti-aircraft Fragmentation Guided Missile	40
B-16	ОФ-941 (M-13) ОФ-942 (M-13УК)	132 mm High Explosive - Fragmentation Rocket	42
B-17	130-JRRO-RM 51	130 mm High Explosive - Fragmentation Rocket	44
B-18	130-JRROF-RM 51	130 mm High Explosive - Fragmentation Rocket	46
B-19	130-JRRONh-RM 51	130 mm High Explosive - Fragmentation Rocket - Practice	48
B-20	122-JROF-RM70 M-21 ОФ	122 mm High Explosive - Fragmentation Non - Guided Rocket	50
B-21	9M21Ф	High Explosive Non-Guided Rocket	54
B-22	9M21K	High Explosive Cassette Warhead Non-Guided Rocket	58
B-23	9M79Ф	High Explosive Semi - Guided Missile	60
B-24	9M79K	High Explosive Cassette Warhead Semi - Guided Missile	64

FWP Ammunition

ANNEX B-1

FIELD of AMMUNITION	*infantry*
CALIBER	*45 mm (112 mm)*
NAME	*Separate Cartridge High Explosive Anti-Tank*
TYPE	*HEAT*
NAME/ASSIGNED MARK (original)	*Nb-P27*
COUNTRY of ORIGIN	*Czechoslovakia*
DEPLOYMENT METHOD	*Fired by Bazooka P27 ("Pancierovka" 27)*

CARTRIDGE	
abbreviation	*Nb-P27*
weight [*kg*]	*3.75*
length [*mm*]	*625*
calibre [*mm*]	*45*
max. speed [$m.s^{-1}$]	*71.5*
maximum range (of fire) [*m*]	*360*

HEAD	
abbreviation	*Nb-P27*
weight [*kg*]	*3.34*
length [*mm*]	*~323*
calibre [*mm*]	*112*
type of bursting charge	*T/H (50/50)*
weight of bursting charge [*kg*]	*1.3*
type of fuze	*Z1, Z2*

CARTRIDGE CASE ASSEMBLY	
abbreviation	*Nk-P27*
weight [*kg*]	*0.792*
length [*mm*]	*302*
type and size of propellant charge	*Nctp 1x0.4/1-KF + Vr (black powder)*
weight of propellant [*kg*]	*0.063*
type of additional mass	*steel sand*
type of electric squib	*P 21 b*

PACKING

Number of rounds in the crate	*4*	**Weight of full crate [*kg*]**	*25.5*

DESCRIPTION

Nb-P27 is used for to engage tanks, armoured vehicles, and self-propelled guns and against buildings and shelters. This projectile consists of a fuze (21), head (4), the shank (13) and cartridge case assembly (6).

COLOR and MARKING

Body colour:	*Olive*
Text colour:	*Red*

FUZE

Type	Characteristic
Z1, Z2	*Inertial fuze, impact with mask safety.*

SAFETY CONSIDERATION THREAT

Do not touch and do not move unexploded projectile.

NOTICE

The cartridge is assembled before shooting. Fuze Z1 has an internal steel components and fuze Z2 has internal Bakelite components. The shaft is made of aluminium.

DRAWINGS/CUTAWAY/MARKING/STENCILING	LEGEND
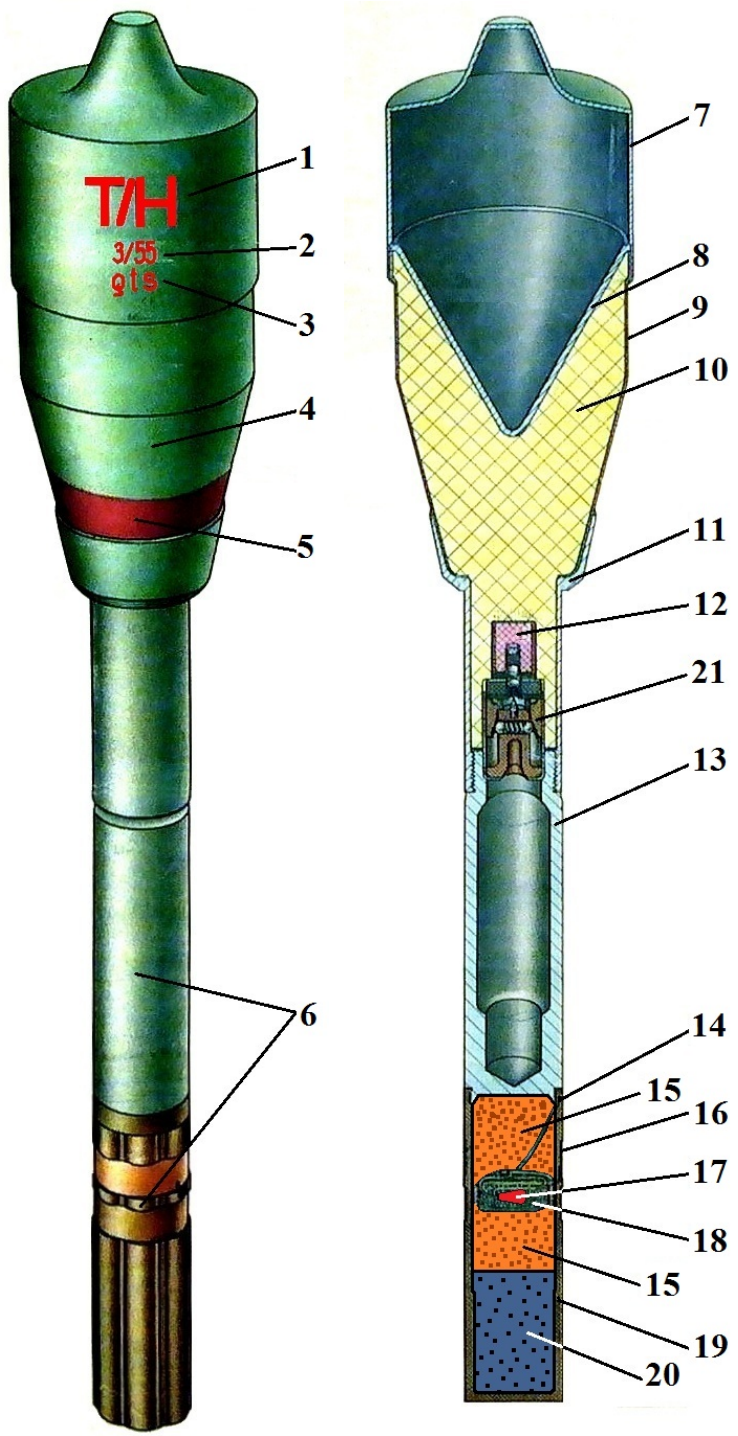	*1 - Type of explosive;* *2 - Series/year production of cartridge;* *3 - Marking of producer;* *4 - Head of projectile;* *5 - Red stripe - marking of type Nb-P27;* *6 - Cartridge case assembly;* *7 - Cap;* *8 - Shaped charge liner (cumulative insert);* *9 - Bell = body of projectile;* *10 - Explosive;* *11 - Cup;* *12 - Booster charge;* *13 - Shaft;* *14 - Narrow brass strip;* *15 - Propellant charge;* *16 - Copper strip - double;* *17 - Electric squib;* *18 - Ignition insert;* *19 - Cartridge case - Bakelite;* *20 - Steel sand;* *21 - Fuze*

	FWP Ammunition	**ANNEX B-2**

FIELD of AMMUNITION	*infantry*
CALIBER	*82 mm (85 mm)*
NAME	*Fixed Cartridge High Explosive Anti-Tank*
TYPE	*HEAT*
NAME/ASSIGNED MARK (original)	*Nb-T21*
COUNTRY of ORIGIN	*Czechoslovakia*
DEPLOYMENT METHOD	*Fired by Bazooka T21 ("Tarasnica" 21)*

CARTRIDGE		PROJECTILE		CARTRIDGE CASE ASSEMBLY	
abbreviation	*Nb-T21*	**abbreviation**	*Nb-T21*	**abbreviation**	*Nk-T21*
weight [*kg*]	*3.60*	**weight [*kg*]**	*2.00*	**weight [*kg*]**	*1.60*
length [*mm*]	*628*	**length [*mm*]**	*458*	**length [*mm*]**	*170*
calibre [*mm*]	*82*	**calibre [*mm*]**	*82*	**type and size of propellant charge**	*Ng kp*
max. speed [$m.s^{-1}$]	*250*	**type of bursting charge**	*T/H (50/50)*		
maximum range (of fire) [*m*]	*2800*			**weight of propellant [*kg*]**	*0.46*
		weight of bursting charge [*kg*]	*0.60*	**diameter [*mm*]**	*85*
		type of fuze	*Z21*	**type of primer**	*electric squib*

PACKING

Number of rounds in the crate	*4*	**Weight of full crate [*kg*]**	*21*

DESCRIPTION

Nb-T21is used to engage tanks, armoured vehicles, self-propelled guns and against buildings and shelters. This projectile consists of a fuze (1), head (10) and body (11), explosive (13), stabilizer (7) with wings (8), tracer (16) and cartridge case assembly (9).

COLOR and MARKING

Body colour:	*Olive*
Text colour:	*Red*

FUZE

Type	Characteristic
Z21	*Inertial fuze, impact with mask safety.*

SAFETY CONSIDERATION THREAT

Do not touch and do not move unexploded projectile.

NOTICE

Projectile has 12 stabilizer fins.

DRAWINGS/CUTAWAY/MARKING/STENCILING	LEGEND
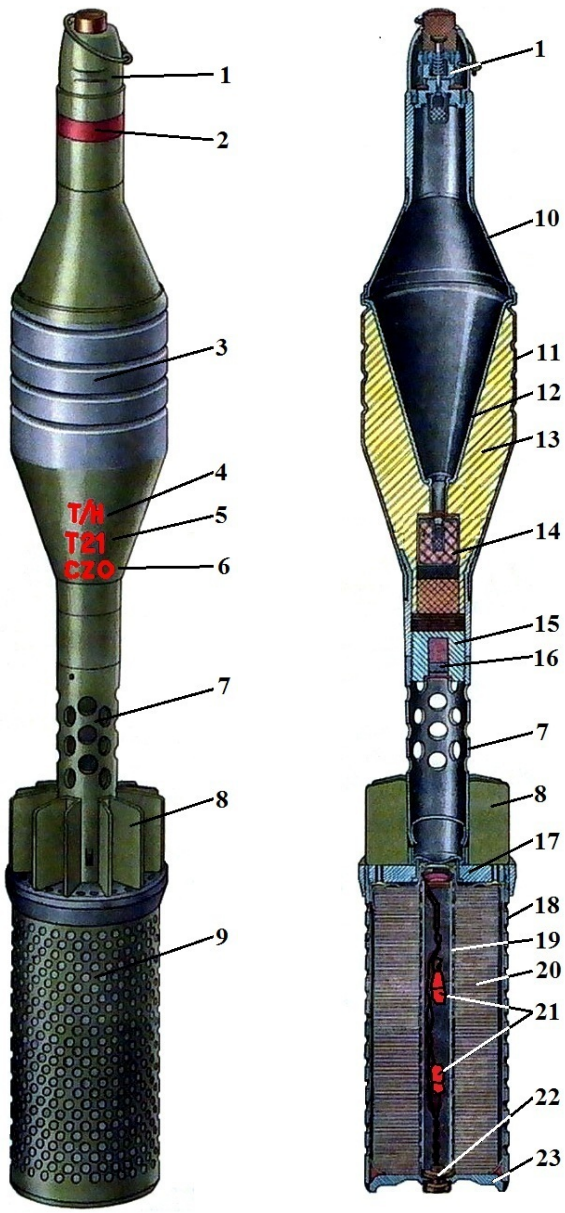	*1 - Fuze;* *2 - Red stripe - marking of type Nb-T21;* *3 - Projectile;* *4 - Type of explosive;* *5 - Type of projectile;* *6 - Marking of producer of mechanical parts of projectile;* *<u>Marking on the other side projectile</u>:* *„gts“ - Marking of filling factory;* *„1/52“ - Series/year production of cartridge;* *„++“ - Weight sign;* *7 - Stabilizer;* *8 - Fin stabilizers;* *9 - Cartridge case assembly;* *10 - Head of projectile;* *11 - Body of projectile;* *12 - Shaped charge liner (cumulative insert);* *14 - Booster charge;* *15 - Case of tracer;* *16 - Tracer;* *17 - Grid of cartridge case;* *18 - Cartridge case;* *19 - Ignition tube;* *20 - Propellant;* *21 - Electric squibs;* *22 - Contact screw of cartridge case;* *23 - Bottom of the cartridge case*
BOTTOM of the cartridge case	
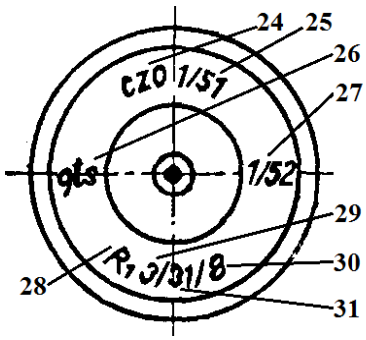	*<u>Stamped marks</u>:* *24 - Marking of producer of cartridge case;* *25 - Series/year manufacture cartridge case;* *<u>Painted signs</u>:* *26 - Marking of filling factory;* *27 - Series/year production of cartridge;* *28 - Marking of propellant;* *29, 31 - Series/year manufacture propellant;* *30 - Marking of the propellants manufacturer*

	FWP Ammunition	**ANNEX B-3**

FIELD of AMMUNITION	*infantry*
CALIBER	*85 mm*
NAME	*85 mm Separate Cartridge High Explosive Anti-Tank with Tracers*
TYPE	*HEAT-T*
NAME/ASSIGNED MARK (original)	*ПГ-7В*
COUNTRY of ORIGIN	*Union of Soviet Socialist Republics*
DEPLOYMENT METHOD	*Fired by РПГ-7В*

CARTRIDGE		HEAD		ROCKET MOTOR		CARTRIDGE CASE ASSEMBLY	
abbreviation	*ПГ-7В*	**abbreviation**	*ПГ-7Г*	**abbreviation**	*ПГ-7Д*	**abbreviation**	*ПГ-7П*
weight [*kg*]	*2.20*	**weight [*kg*]**	*1.85*	**weight [*kg*]**	*0.543*	**weight [*kg*]**	*0.385*
length [*mm*]	*640 - 656*	**length [*mm*]**	*357*	**type of charge**	*РНДСИ-5К*	**type of propellant charge**	*НБЛ-38*
max. speed [$m.s^{-1}$]	*300*	**calibre [*mm*]**	*85*	**weight of charge [*kg*]**	*0.220*		
maximum range (of fire) [*m*]	*500*	**type of bursting charge**	*A-IX-1*			**weight of propellant charge [*kg*]**	*0.124*
		weight of bursting charge [*kg*]	*0.388*				
		type of fuze	*ВП-7*				

PACKING

Number of rounds in the crate	*6*	**Weight of full crate [*kg*]**	*33*

DESCRIPTION

ПГ-7В is used to engage tanks, armoured vehicles, and self-propelled guns and against buildings and shelters. This projectile consists of fuze - head (1) and bottom (7) parts, hollow-charge projectile (2-6) with rocket engine (9-14) and tracer (15a), cartridge case assembly16).

COLOR and MARKING

Body colour:	*Olive*
Text colour:	*Black*

FUZE

Type	Characteristic
ВП-7	*Fuze – two part (nose and base), impact, electrical, secured with mask safety and self-destroying function.*

SAFETY CONSIDERATION THREAT

Do not touch and not move unexploded projectile.

NOTICE

DRAWINGS/CUTAWAY/MARKING/STENCILING

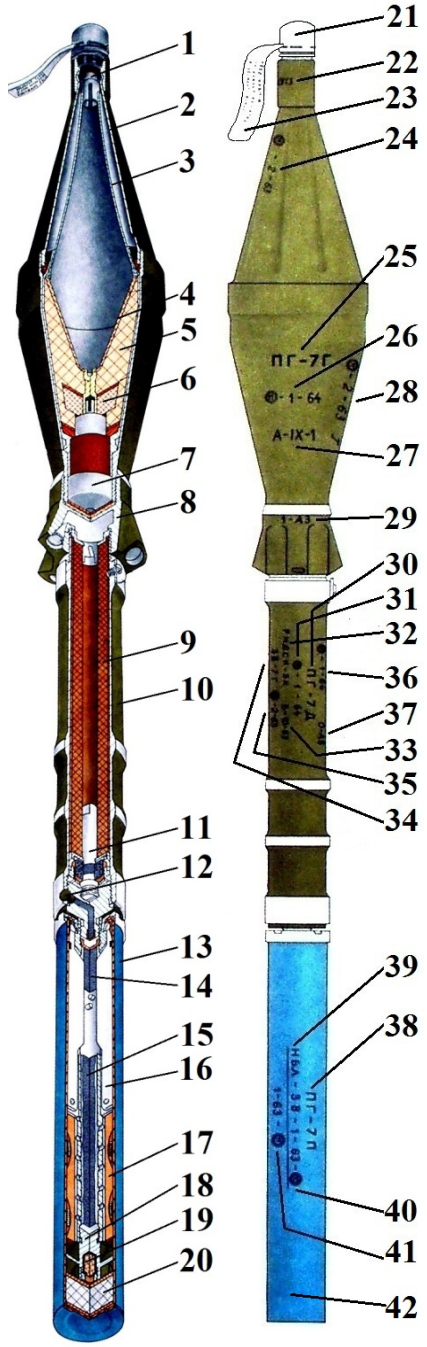

PROJECTILE IN FLIGHT

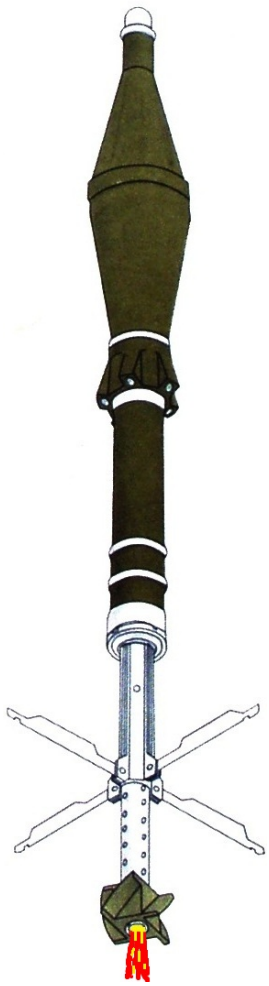

CARTRIDGE CASE ASSEMBLY PACKAGING

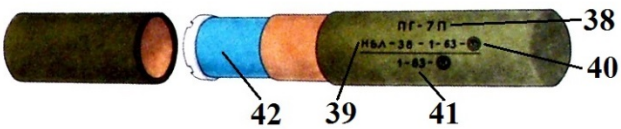

LEGEND

1 - Fuze - head part;
2 - Ogive;
3 - Internal conical cap;
4 - Shaped charge liner (cumulative insert);
5 - Hollow charge;
6 – Insert (waveshaper);
7 - Fuze - bottom part;
8 - Nozzle block with nozzles;
9 - Powder charge of rocket motor;
10 - Body of rocket motor;
11 - Pyrotechnic delay;
12 - Primer;
13 – Paper cartridge case;
14 - Auxiliary priming charge;
15 - Basic priming charge;
16 - Fin stabilizers;
17 - Launch powder filling;
18 - Turbine; 19 - Tracer;
20 - Plug; 21 - Protective cap;
22 - Symbol of control;
23 - The textile label with inscription: "BEFORE CHARGING REMOVE PIN AND TAKE OFF PROTECTIVE CAP";
24 - Number of mechanical factory - series of mechanical part of head-year of production and symbol of control;
25 - Marking of head part of projectile;
26 - Number of filling factory - series - year of filling the head part of projectile;
27 - Type of explosive;
28 - Number of mechanical factory - series of mechanical part - year of production and symbol of control;
29 - Series of nozzle block and number of melt nozzle block;
30 - Marking of rocket motor;
31 - Number of filling factory - series - year of filling the rocket motor;
32 - Marking of charge of rocket motor;
33 - Marking of producer of charge - series - year of production charge;
34 - Marking of pyrotechnic timers;
35 - Number of producer - series - year production of pyrotechnic timers;
36 - Number of producer - series - year production of mechanical part of rocket motor;
37 - Marking of control and number of melt body of rocket motor;
38 - Marking of cartridge case assembly;
39 - Marking of propellant;
40 - Number series - year - symbol of producer of propellant;
41 - Number series - year - symbol of producer of cartridge case assembly
42 - Cartridge case assembly

	FWP Ammunition	**ANNEX B-4**

FIELD of AMMUNITION	*infantry*
CALIBER	*68 mm*
NAME	*Fixed Cartridge High Explosive Anti-Tank*
TYPE	*HEAT*
NAME/ASSIGNED MARK (original)	*RPG-75*
COUNTRY of ORIGIN	*Czechoslovakia*
DEPLOYMENT METHOD	*Fired by RPG-75*

CARTRIDGE		PROJECTILE		COMBUSTION CHAMBER	
abbreviation	*RPG-75*	**abbreviation**	*68-Pr*	**type and size of propellant charge**	*Ngtp 4.0x0.53/130-11.1*
weight [*kg*]	*3.20*	**weight [*kg*]**	*0.84*		
length in the transport position [*mm*]	*633*	**calibre [*mm*]**	*68*		
		length [*mm*]	*270*	**weight of propellant [*kg*]**	*0.085*
length in combat position [*mm*]	*890*	**type of bursting charge**	*A-IX-1*	**material of combustion chamber**	*steel chamber with nozzle*
calibre [*mm*]	*68*	**weight of bursting charge [*kg*]**	*0.32*		
max. speed [$m.s^{-1}$]	*189*	**type of fuze**	*z 75 (+rp 75)*		
maximum range [*m*]	*750*				

PACKING

Number of rounds in the crate	*6*	**Weight of full crate [*kg*]**	*34*

DESCRIPTION

RPG-75 is used to engage tanks, armoured vehicles, and self-propelled guns and against buildings and shelters. This projectile (22) consists of a fuze (34 and 42), body (37), explosive (39), tracer (45) and combustion chamber with propellant (27).

COLOR and MARKING

Body colour:	*Olive*
Text colour:	*Red*

FUZE

Type	Characteristic
z 75 (+rp 75)	*Fuze - nose, direct action, impact with self-destruction of projectile.*

SAFETY CONSIDERATION THREAT

Do not touch and do not move unexploded projectile.

NOTICE

"rp 75" is detonator safety.

DRAWINGS/CUTAWAY/MARKING/STENCILING		LEGEND
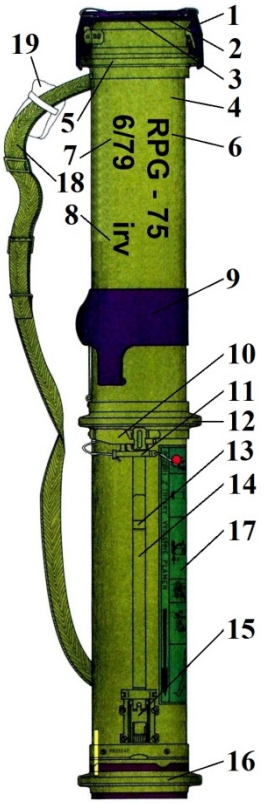	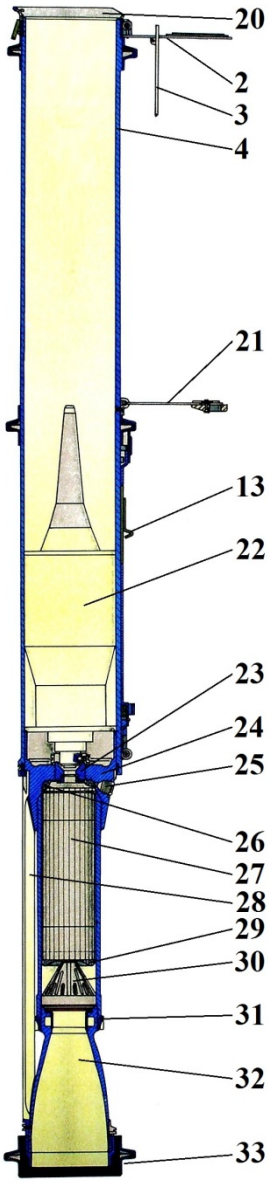	*1 - Fuze;* *2 - Front sight;* *3 - Cover mouth;* *4 - Launch tube;* *5 - Front protective collar;* *6 - Type of cartridge;* *7 - Series/year production of cartridge;* *8 - Marking of producer of cartridge;* *9 - Rubber cap visor;* *10 - Shooting safety;* *11 - Transport safety;* *12 - Middle protective collar;* *13 - Trigger;* *14 - Rod of trigger;* *15 - Firing pin;* *16 - Rear protective collar;* *17 - Label with instructions of use cartridge;* *18 - Canvas belt;* *19 - Hearing protection in case;* *20 - Mouth protector;* *21 - Visor;* *22 - Projectile;* *23 - Screw bulkhead;* *24 - Breech;* *25 - Primer;* *26 - Front igniter;* *27 - Propellant;* *28 - Guide rail;* *29 - Rear igniter;* *30 - Grid;* *31 - Locknut;* *32 - Nozzle;* *33 - Rubber bumper;* *34 - Fuze;* *35 - Cap* *36 - The crown projectile;* *37 - Body of projectile;* *38 - Shaped charge liner (cumulative insert);* *39 - Explosive;* *40 - Insert;* *41 - Booster charge;* *42 - Body of detonator safety;* *43 - Detonator;* *44 - Bottom closure;* *45 – Tracer and self-destruct pyrotechnic delay device;* *46 - Calibre;* *47 - Series/year of production projectile;* *48 - Marking of filling factory;* *49 - Type of projectile.*
PROJECTILE		
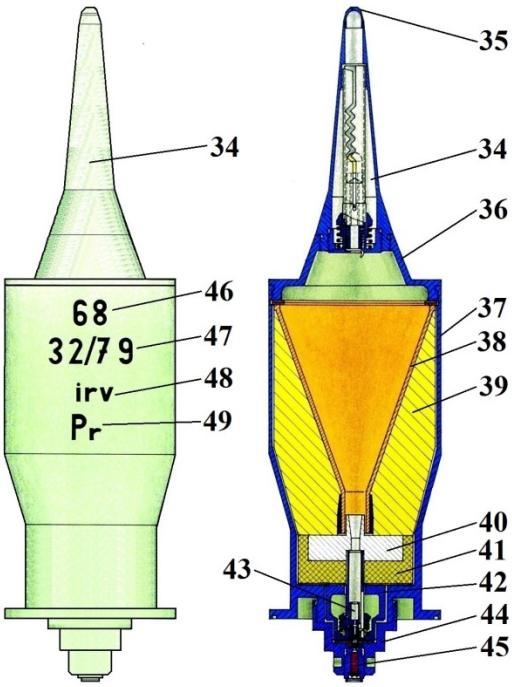		

	FWP Ammunition	ANNEX B-5

FIELD of AMMUNITION	*anti-tank artillery*
CALIBER - DIAMETER	*136 mm*
NAME	*136 mm High Explosive Anti-Tank Guided Missile*
TYPE	*HEAT*
NAME/ASSIGNED MARK (original)	*3M6*
COUNTRY of ORIGIN	*Union of Soviet Socialist Republics*
DEPLOYMENT METHOD	*Fired by* *2K15 (2P26 - GAZ-69),* *2K16 (2P27 - BRDM-1)*

MISSILE 3M6

abbreviation	*3M6*	**average speed [$m.s^{-1}$]**	*100*
another name	*ШМЕЛЬ*	**time of flight [*s*]**	*24*
NATO reporting name	*AT-1 Snapper*	**warhead marking**	*3H13*
guidance system	*MCLOS - wire-guided*	**type of explosive**	
weight of missile [*kg*]	*24*	**weight of explosive [*kg*]**	
weight of warhead [*kg*]	*5.4*	**type of fuze**	*3Э5*
length of missile [*mm*]	*1150*	**armour penetration [*mm*] / angle collision [°]**	*300/90*
maximum range (of fire) [*m*]	*2200*	**range stabilization wings [*mm*]**	*750*
minimum range (of fire) [*m*]	*500*		

PACKING

Number of rocket in the crate	*1*	**Weight of full crate with rockets[*kg*]**	

DESCRIPTION

3M6 ШМЕЛЬ (Bumblebee) is used to engage armoured targets, especially tanks and armoured vehicles. This missile consists of a warhead (13), rocket carrier with control and stabilizing parts (14), tracers (15) and fuze (1).

COLOR and MARKING

Body colour of rocket and container:	*Olive*
Text colour:	*Black*

FUZE

Type	Characteristic
3Э5	*Fuze - electromechanical with a pyrotechnic remote arming system and has one stage of safety and is armed upon launch by an electric pulse from the launch battery.*

SAFETY CONSIDERATION THREAT

Do not touch and do not move unexploded missile.

NOTICE

Inert model of missile has black warhead and red tracers.

DRAWINGS/CUTAWAY/MARKING/STENCILING	LEGEND
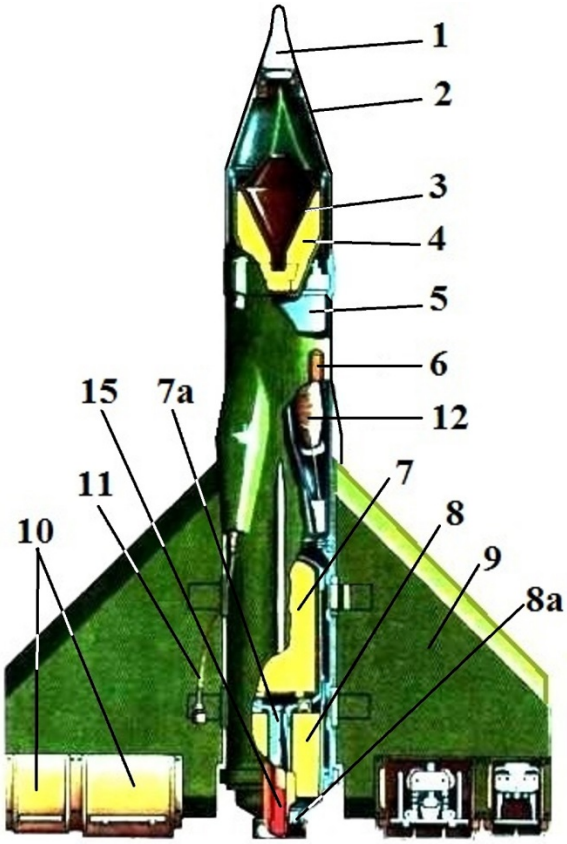	*1 - Fuze;* *2 - Ogive;* *3 - Shaped charge liner (cumulative insert);* *4 - Hollow charge;* *5 - Board battery;* *6 - Socket of the terminal board ;* *7 - Propellant of rocket flight motor;* *7a - Nozzle of rocket flight motor;* *8 - Propellant of rocket launch motor;* *8a - Nozzle of rocket launch motor;* *9 - Stabilizing wings;* *10 - Control elements of the missile flight;* *11 - Steering cable;* *12 - Steering wire coil;* *13 - Warhead (this is scale model);* *14 - Rocket carrier with control and stabilizing parts;* *15 - Tracers;* *16 - Type of missile;* *17 - Series - year completion of missile - index finishing base* *18 - Serial number of missile - year of manufacture - index of manufacturer;* *19 - Fixing place during transport and storage;* *20 - Definition of space for mounting - bordered black stripes*
MISSILE IN FLIGHT (MAKET)	
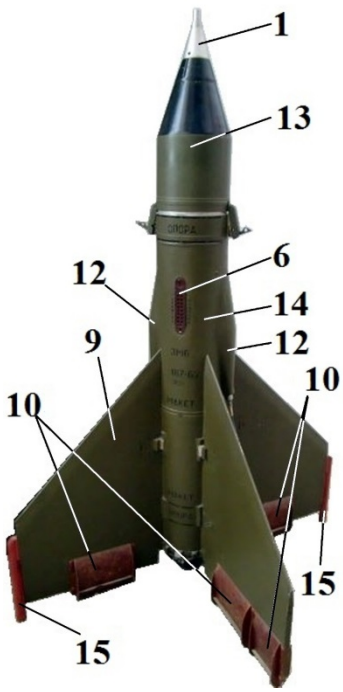	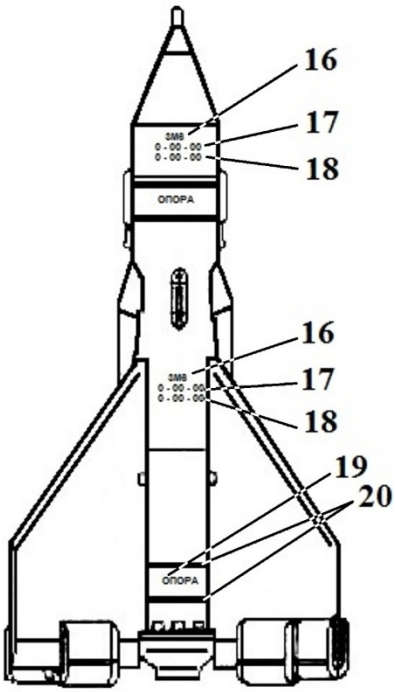

	FWP Ammunition	ANNEX B-6

FIELD of AMMUNITION	*anti-tank artillery*
CALIBER	*125 mm*
NAME	*125 mm High Explosive Anti-Tank Guided Missile*
TYPE	*HEAT*
NAME/ASSIGNED MARK (original)	*9M14M*
COUNTRY of ORIGIN	*Union of Soviet Socialist Republics* *Czechoslovakia*
DEPLOYMENT METHOD	*Fired by for example:* *9K11, 9П133, БМП-1, БМД-1*

MISSILE 9M14M

abbreviation	*9M14M-K*	**warhead marking**	*9H110M*
another name	*МАЉУТКА*	**weight of warhead [*kg*]**	*2.50*
NATO reporting name	*AT-3B SAGGER B*	**type of explosive**	*A-IX-1*
guidance system	*MCLOS - wire-guided*	**weight of explosive [*kg*]**	*1.193*
weight of missle [*kg*]	*10.90*	**propellant of launch motor / weight**	*Ng tp*
length of rocket [*mm*]	*860*	**weight of propellant - launch motor**	*0.68*
range stabilization wings [*mm*]	*393*	**electrical primer launch motor**	*9X110*
maximum range (of fire) [*m*]	*3000*	**propellant of flight motor / weight**	*Ng vp*
minimum range (of fire) [*m*]	*500*	**weight of propellant - flight motor**	*1.50*
average speed [$m.s^{-1}$]	*120*	**electrical primer flight motor**	*9X237*
time of flight [*s*]	*25*	**igniter of flight motor**	*9X110*
type of fuze	*9Э212*	**armour penetration [*mm*] / angle collision [°]**	*400/90* *200/60*

PACKING

Number of missle in the crate	*1*	**Weight of full crate with rockets[*kg*]**	*33*

DESCRIPTION

9M14M МАЉУТКА (Little one)is used to engage armoured targets, especially tanks and armoured vehicles. This missile consists of a warhead (1), rocket flight motor (7), rocket launch motor (5) and fuze (2).

COLOR and MARKING

Body colour:	*Olive*
Text colour:	*Black*

FUZE

Type	Characteristic
9Э212	*Fuze - impact, electrical, secured with mask safety.*

SAFETY CONSIDERATION THREAT

Do not touch and do not move unexploded missile projectile.

NOTICE

DRAWINGS/CUTAWAY/STENCILING

MISSILE

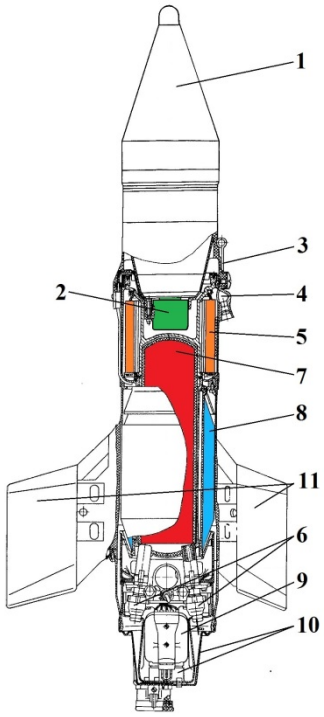

WARHEAD

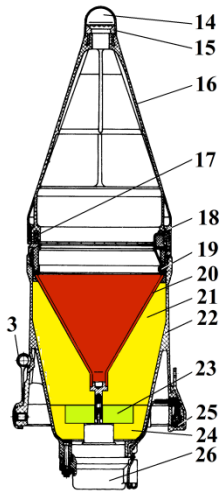

TRACER

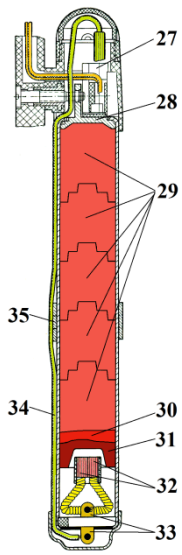

MARKING OF TRACER

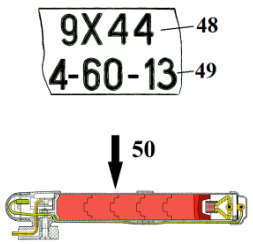

MARKING OF MISSILE

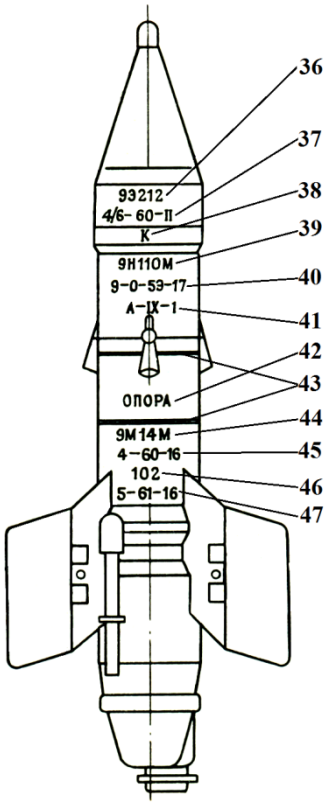

VIEW FROM THE BACK

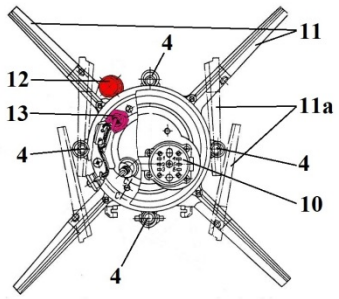

LEGEND

1 - Warhead; 2 - Bottom of fuze;
3 -Connecting elements;
4 - Nozzle of rocket launch motor;
5 - Propellant of rocket launch motor; 6 - Nozzle (tilting) of rocket flight motor;
7 - Propellant of rocket flight motor;
8 - Control wire coil;
9 - Gyroscopic and control block;
10 - Plug and rubber cover;
11 - Stabilizing wings;
11a - Stabilizing wings in the folded position; 12 - Tracer;
13 - Igniter of flight motor;
14 - Cap; 15 - Bumper;
16 - Cone distance; 17 - Piezoelectric element; 18 - Contact; 19 - Touching ring; 20 - Shaped charge liner (cumulative insert); 21 - Upper hollow charge; 22 - Body of warhead; 23 - Insert; 24 - Bottom hollow charge; 25 - Terminal block and shorting plug; 26 - Bottom part of fuze; 27 - Terminals;
28 - Bottom of tracer;
29 - Illuminating composition;
30 - Relay composition;
31 - Igniter composition;
32 - Electric igniters МБ-2Н; 33 - Contacts;
34 - Electric wire;
35 - Balance weights; 36 - Index of fuze; 37 - Series - year - index manufacturer of fuze; 38 - Type of warhead - „K“ = HEAT - cumulative effect; 39 - Index of warhead; 40 - Series of warhead filling - index manufacturer of warhead body - year of warhead filling - index filling factory of warhead; 41 - Explosive type of hollow charge; 42 - Fixing place during transport and storage;
43 - Definition of space for mounting - bordered black stripes
44 - Index of missile;
45 - Series - year - index manufacturer of missile;
46 - Serial number of missile;
47 - Series - year completion of missile - index finishing base;
48 - Index of tracer;
49 - Series - year - index manufacturer of tracer;
50 - Marking location on the tracer;
51 - Instructions for composing stabilizing wings

	FWP Ammunition	ANNEX B-7

FIELD of AMMUNITION	*anti-tank artillery*
CALIBER	*125 mm*
NAME	*125 mm High Explosive Anti-Tank Guided Missile*
TYPE	*HEAT*
NAME/ASSIGNED MARK (original)	*9M14P1*
COUNTRY of ORIGIN	*Union of Soviet Socialist Republics* *Czechoslovakia*
DEPLOYMENT METHOD	*Fired by for example:* *9K11, 9П133, БМП-1, БМД-1*

MISSILE 9M14P1

abbreviation	*9M14P1-K*	**warhead marking**	*9H110M2*
another name	*МАЉУТКА*	**weight of warhead [*kg*]**	*2.675*
NATO reporting name	*AT-3C SAGGER C*	**type of explosive**	*ОКФОЛ*
guidance system	*MCLOS or SACLOS - wire-guided*	**weight of explosive [*kg*]**	*1.303*
		propellant of launch motor / weight	*Ng tp*
weight of missile [*kg*]	*11.40*	**weight of propellant - launch motor**	*0.68*
length of missile [*mm*]	*860*	**electrical primer launch motor**	*9X110*
range stabilization wings [*mm*]	*393*	**propellant of flight motor / weight**	*Ng vp*
maximum range (of fire) [*m*]	*3000*	**weight of propellant - flight motor**	*1.50*
minimum range (of fire) [*m*]	*500*	**electrical primer flight motor**	*9X237*
average speed [$m.s^{-1}$]	*120*	**igniter of flight motor**	*9X110*
time of flight [*s*]	*25*	**armour penetration [*mm*] / angle collision [°]**	*520/90* *460/60*
type of fuze	*9Э236*		

PACKING

Number of rocket in the crate	*1*	**Weight of full crate with rockets[*kg*]**	*33*

DESCRIPTION

9M14P1 is used to engage armoured targets, especially tanks and armoured vehicles. This missile consists of a warhead (1), rocket flight motor (7), rocket launch motor (5) and fuze (2).

COLOR and MARKING

Body colour:	*Olive*
Text colour:	*Black or Yellow*

FUZE

Type	Characteristic
9Э236	*Fuze - impact, electrical, secured with mask safety.*

SAFETY CONSIDERATION THREAT

Do not touch and not move unexploded rocket projectile.

NOTICE

One of the two tracers gives infrared light.
Missile is stored without tracers.

DRAWINGS/CUTAWAY/STENCILING		LEGEND
MISSILE	WARHEAD	
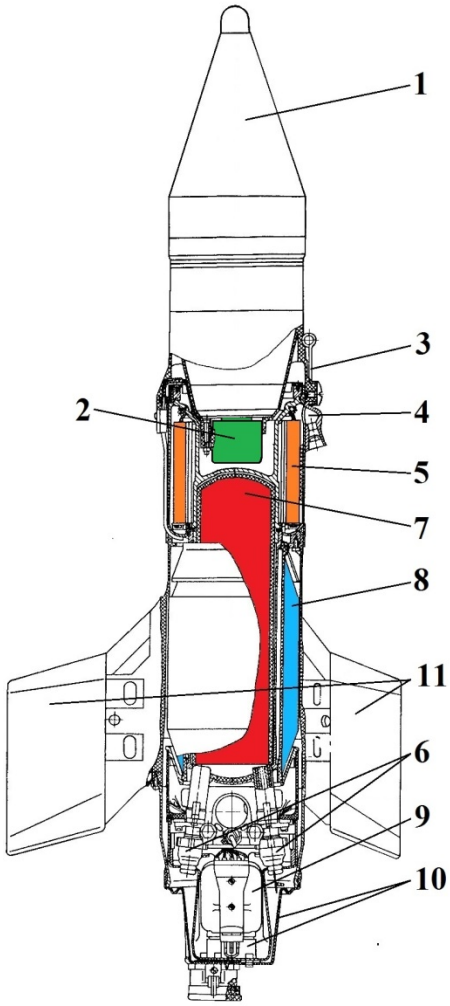	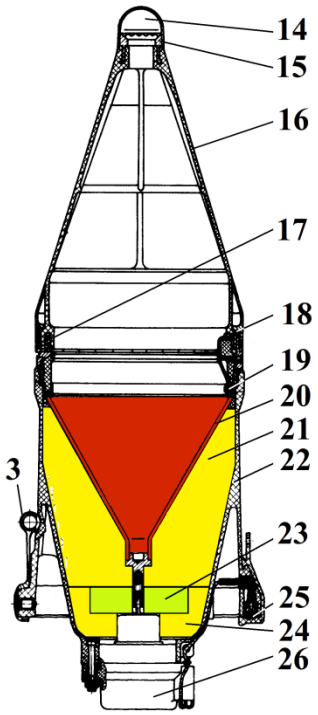	*1 - Warhead;* *2 - Bottom of fuze;* *3 -Connecting elements;* *4 - Nozzle of rocket launch motor;* *5 - Propellant of rocket launch motor;* *6 - Nozzle (tilting) of rocket flight motor;* *7 - Propellant of rocket flight motor;* *8 - Steering wire coil;* *9 - Gyroscopic and control block;* *10 - Plug and rubber cover;* *11 - Stabilizing wings;* *11a - Stabilizing wings in the folded position;* *12 - Tracers;* *13 - Igniter of flight motor;* *14 - Cap;* *15 - Bumper;* *16 - Cone distance;* *17 - Piezoelectric element;* *18 - Contact;* *19 - Touching ring;* *20 - Shaped charge liner (cumulative insert);* *21 - Upper hollow charge;* *22 - Body of warhead;* *23 - Insert;* *24 - Bottom hollow charge;* *25 - Terminal block and shorting plug;* *26 - Bottom part of fuze;*
VIEW FROM THE BACK		
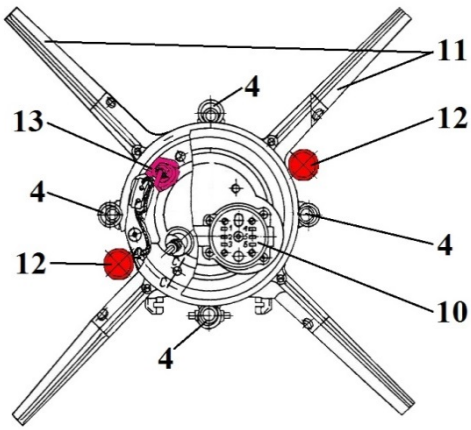		

MISSILE MARKING	LEGEND
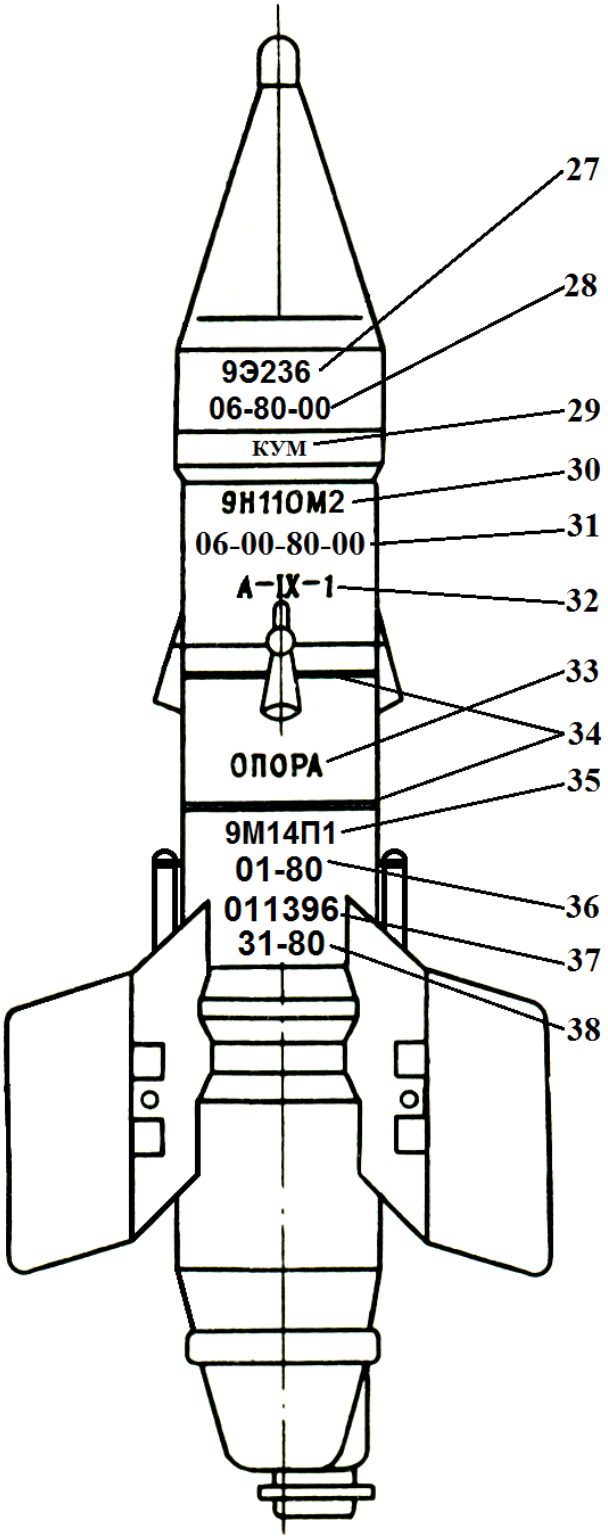	*27 - Index of fuze;* *28 - Series - year - index manufacturer of fuze;* *29 - Type of warhead - „KYM“ or „K“ - cumulative effect;* *30 - Index of warhead;* *31 - Series of warhead filling - index manufacturer of warhead body - year of warhead filling - index filling factory of warhead;* *32 - Explosive type of hollow charge;* *33 - Fixing place during transport and storage;* *34 - Definition of space for mounting - bordered black stripes* *35 - Index of missile;* *36 - Series - year manufacture of missile;* *37 - Serial number of missile;* *38 - Series - year completion of missile.*

MISSILE MARKING	LEGEND
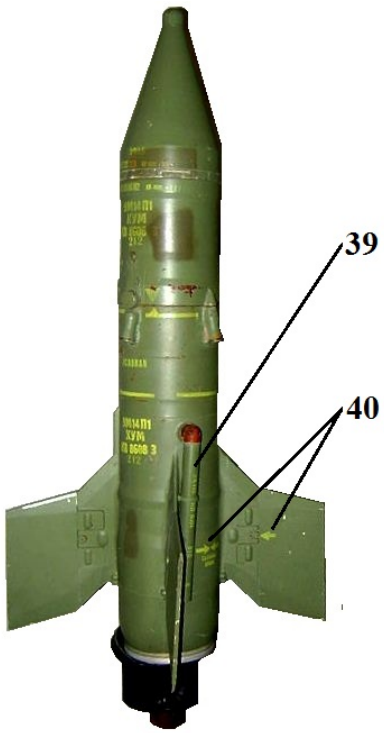	*39 - Marking of tracer - type, series and year manufacture;* *40 - Instructions for assembling stabilizing wings*

MISSILE LAUNCH

	FWP Ammunition	ANNEX B-8

FIELD of AMMUNITION	*anti-tank artillery*
CALIBER	*120 mm*
NAME	*120 mm High Explosive Anti-Tank Guided Missile*
TYPE	*HEAT*
NAME/ASSIGNED MARK (original)	*9M111*
COUNTRY of ORIGIN	*Union of Soviet Socialist Republics* *Czechoslovakia*
DEPLOYMENT METHOD	*Fired by for example:* *9K111, 9П135, 9П148, БМП-1П,2, БМД-1П, 2*

MISSILE 9M111

abbreviation	*9M111-2-K*	**time of flight [*s*]**	*11.0*
another name	*ФАГОТ*	**warhead marking**	*9H122*
NATO reporting name	*AT-4B SPIGOT B*	**weight of warhead [*kg*]**	*2.50*
guidance system	*SACLOS - wire-guided*	**type of explosive**	*ОКФОЛ*
weight with container [*kg*]	*13.00*	**weight of explosive [*kg*]**	*1.00*
length of container [*mm*]	*1098*	**type of fuze**	*9Э234*
weight of missile [*kg*]	*11.2*	**armour penetration [*mm*] / angle collision [°]**	*200/60;* *400/90*
length of missile [*mm*]	*863*	**propellant of launch motor**	*9X146*
range stabilization wings [*mm*]	*369*	**electrical primer launch motor**	*9X284*
maximum range (of fire) [*m*]	*2000*	**propellant of flight motor**	*9X145.010*
minimum range (of fire) [*m*]	*70*	**electrical primer flight motor**	*9X237*
average speed [$m.s^{-1}$]	*186*	**igniter of flight motor**	*9X145.020*

PACKING

Number of rocket in the crate	*2*	**Weight of full crate with rockets[*kg*]**	*57*

DESCRIPTION

9M111 ФАГОТ (Bassoon) is used to engage armoured targets, especially tanks and armoured vehicles. This rocket consists of a warhead (8), rocket flight motor (9), rocket launch motor (12) and fuze (67).

COLOR and MARKING

Body colour:	**container:**	*Olive*
	control block; flight motor, launch motor	*Olive*
	instrumental part	*Brown*
Text colour:		*Black*

FUZE

Type	Characteristic
9Э234	*Fuze - impact, electromechanical, secured with mask safety and self-destroying function.*

SAFETY CONSIDERATION THREAT

Do not touch and do not move unexploded missile rocket projectile.

NOTICE

DRAWINGS/CUTAWAY/MARKING/STENCILING		LEGEND
MISSILE CONTAINER		
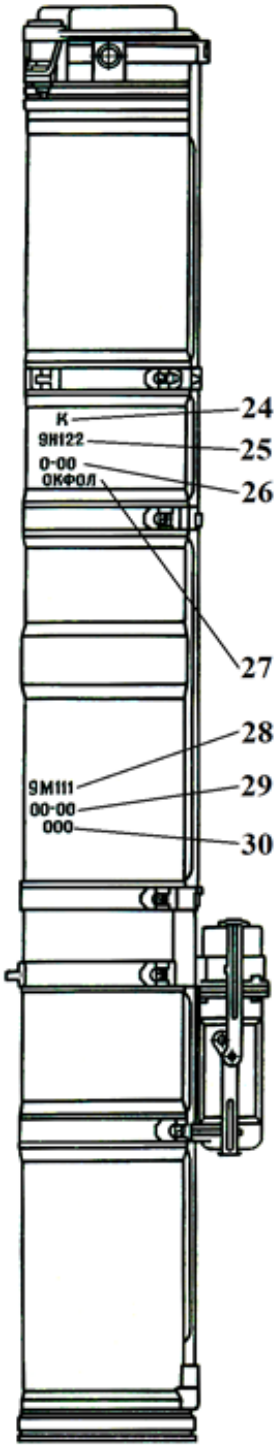	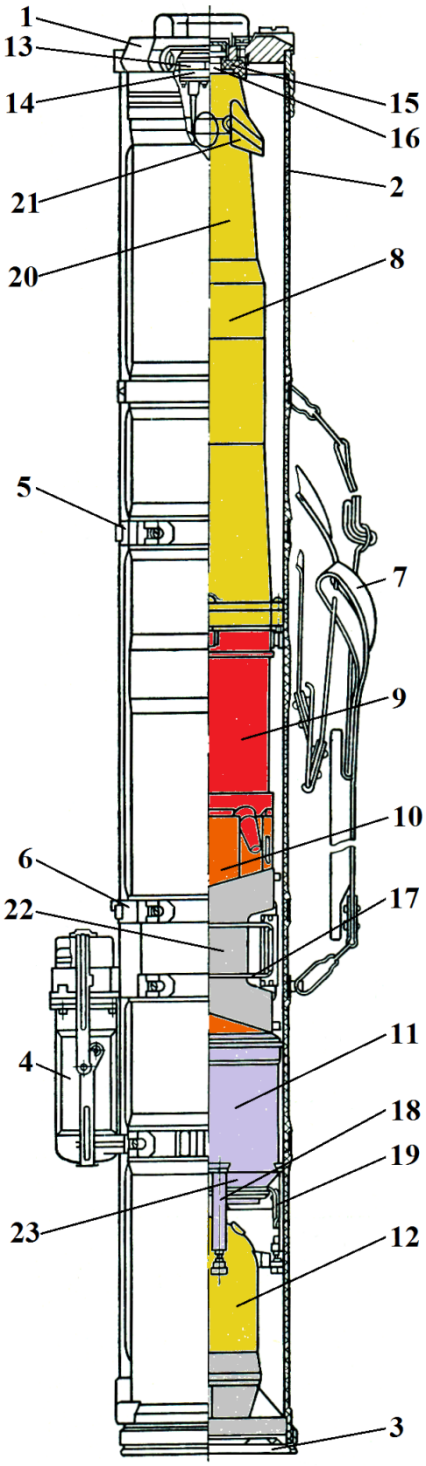	*1 - Front cover of launcher tube;* *2 - Launcher tube;* *3 - Rear cover of launcher tube;* *4 - Power supply block;* *5 - Front mounting launcher tube;* *6 - Rear mounting launcher tube;* *7 - Carrying belt;* *8 - Warhead;* *9 - Rocket flight motor;* *10 - Instrumental part;* *11 - Steering wire coil and infrared lamp;* *12 - Launch Motor;* *13 - Body fork connections Ш4;* *14 - Body socket connections Ш4;* *15 - Body fork connections Ш1б;* *16 - Socket connections Ш1а;* *17 - Stirrup;* *18 - Support;* *19 - Spring;* *20 – Nose part with servo mechanism and contact part;* *21 - Rudder wing;* *22 - Stabilising wing;* *23 - Infrared lamp with cover;* *24 - Type of warhead - „K“ - HEAT;* *25 - Index of warhead;* *26 - Series of warhead filling - year of warhead filling;* *27 - Explosive type of hollow charge;* *28 - Index of missile;* *29 - Series - year manufacture of missile;* *30 - Serial number of missile;*

MISSILE BEFORE LAUNCH	CUTAWAY OF MISSILE	LEGEND
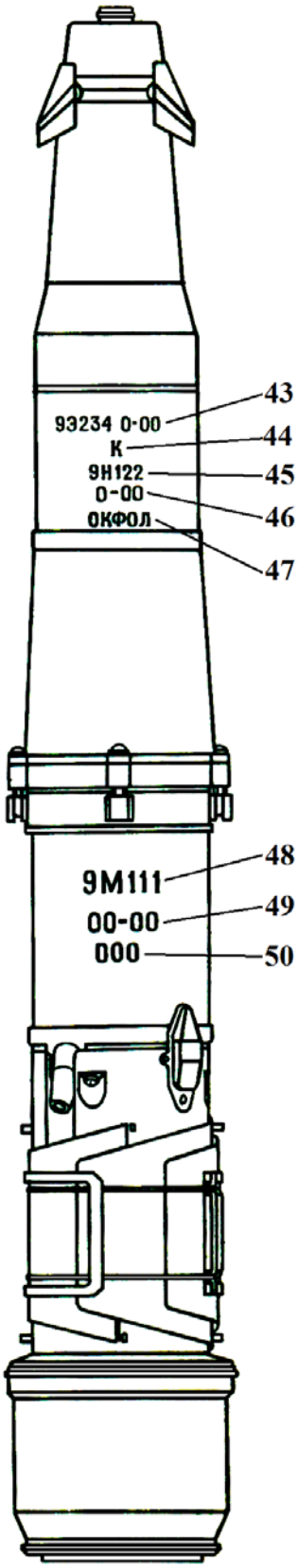	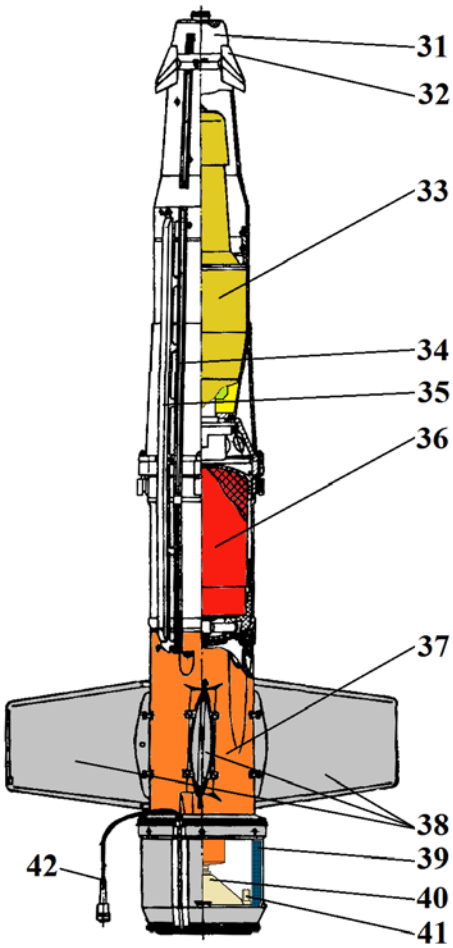	*31 – Control bloack head section;* *32 - Rudder wing;* *33 - Warhead;* *34 - Groove;* *35 - Aerodynamic cover;* *36 - Rocket flight motor;* *37 - Instrumental part;* *38 - Stabilising wings;* *39 - Steering wire coil;* *40 - Infrared lamp;* *41 - Gas switch;* *42 - Control and power cable with fork;* *43 - Index of fuze and number of manufacture series of fuze;* *44 - Type of warhead - „K“ - cumulative effect;* *45 - Index of warhead;* *46 - Series of warhead filling - year of warhead filling;* *47 - Explosive type of hollow charge;* *48 - Index of missile;* *49 - Series - year manufacture of missile;* *50 - Serial number of missile;*
	MISSILE IN FLIGHT (MAKET)	

FLIGHT MOTOR	WARHEAD	LEGEND
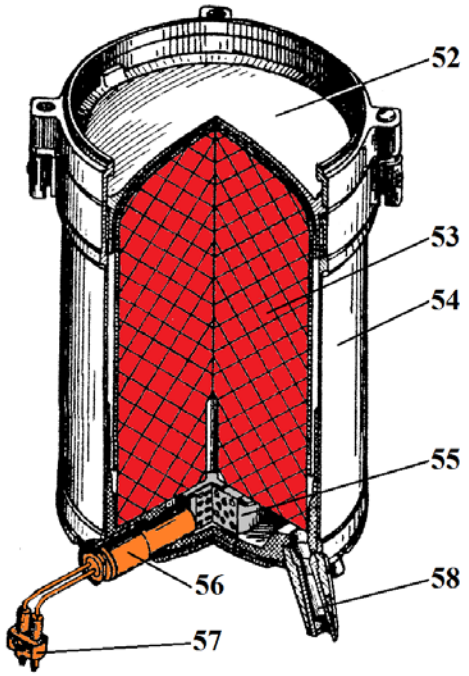	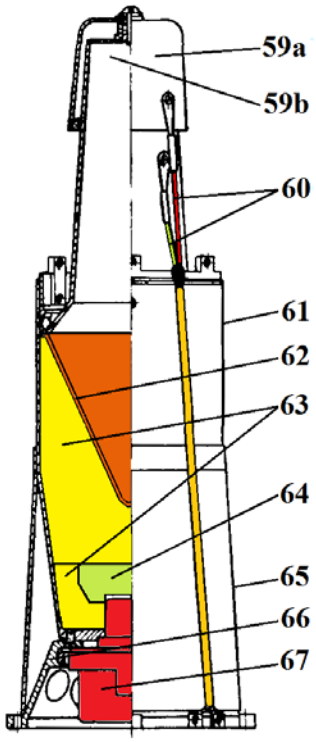	*52 - Cover;* *53 - Propellant of flight motor;* *54 - Combustion chamber;* *55 - Igniter;* *56 - Electrical primer 9X237;* *57 - Connecting fork;* *58 - Nozzle of flight motor;* *59a - Outer cone of contact attachment;* *59b - Inner cone of contact attachment;* *60 - Electrical cables;* *61 - Body of hollow charge;* *62 - Shaped charge liner (cumulative insert);* *63 - Upper and bottom hollow charges;* *64 - Insert;* *65 - Body;* *66 - Transitional bottom;* *67 - Fuze;*
CUTAWAY AND MARKING OF LAUNCHLAUNCH MOTOR		
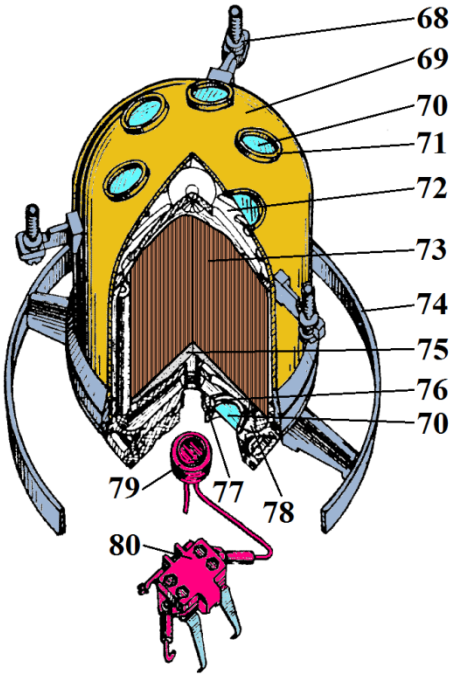 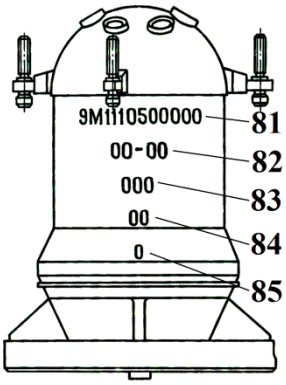		*68 - Holder screw;* *69 - Combustion chamber;* *70 - Membrane;* *71 - Front insert;* *72 - Front grid;* *73 - Propellant of launch motor;* *74 - Aerodynamic strut;* *75 - Igniter;* *76 - Rear insert;* *77 - Connecting tube;* *78 - Jet block;* *79 - Electrical primer 9X284;* *80 - Contact block;* *81 - Drawing number;* *82 - Series - year manufacture of launch motor;* *83 - Serial number;* *84 - Year of filling;* *85 - The number of the ring which governs the critical section between the body launch motor and launcher tube.*

	FWP Ammunition	ANNEX B-9

FIELD of AMMUNITION	*anti-tank artillery*
CALIBER	*120 mm*
NAME	*120 mm High Explosive Anti-Tank Guided Missile*
TYPE	*HEAT*
NAME/ASSIGNED MARK (original)	*9M111M*
COUNTRY of ORIGIN	*Union of Soviet Socialist Republics* *Czechoslovakia*
DEPLOYMENT METHOD	*Fired by for example:* *9K111, 9П135, 9П148, БМП-1П,2, БМД-1П, 2*

MISSILE 9M111M

abbreviation	*9M111M-K*	**warhead marking**	*9H122*
another name	*ФАГОТ-М*	**weight of warhead [*kg*]**	*2.50*
NATO reporting name	*AT-4B SPIGOT B*	**type of explosive**	*ОКФОЛ-3.5*
guidance system	*SACLOS - wire-guided*	**weight of explosive [*kg*]**	
weight with container [*kg*]	*13.2*	**type of fuze**	*9Э234М*
length of container [*mm*]	*1098*	**armour penetration [*mm*] / angle collision [°]**	*230/60;* *460/90*
weight of missile [*kg*]	*11.5*	**propellant of launch motor**	*9X146*
length of missile [*mm*]	*910*	**electrical primer launch motor**	*9X284*
range stabilization wings [*mm*]	*396*	**propellant of flight motor**	*9X145.010*
maximum range (of fire) [*m*]	*2500*	**electrical primer flight motor**	*9X237*
minimum range (of fire) [*m*]	*75*	**igniter of flight motor**	*9X145.020*
average speed [$m.s^{-1}$]	*178*	**time of flight [*s*]**	*13.5*

PACKING

Number of rocket in the crate	*2*	**Weight of full crate with rockets[*kg*]**	*57.5*

DESCRIPTION

9M111M is used to engage armoured targets, especially tanks and armoured vehicles. This rocket consists of a warhead (8), rocket flight motor (9), rocket launchlaunch motor (12) and fuze (67).

COLOR and MARKING

Body colour:	**container:**	*Olive*
	control block; flight motor, launch motor	*Olive*
	instrumental part	*Brown*
Text colour:		*Black*

FUZE

Type	Characteristic
9Э234М	*Fuze - impact, electromechanical, secured with mask safety and self-destroying function.*

SAFETY CONSIDERATION THREAT

Do not touch and do not move unexploded missile projectile.

NOTICE

DRAWINGS/CUTAWAY/MARKING/STENCILING		LEGEND
MISSILE IN CONTAINER		
	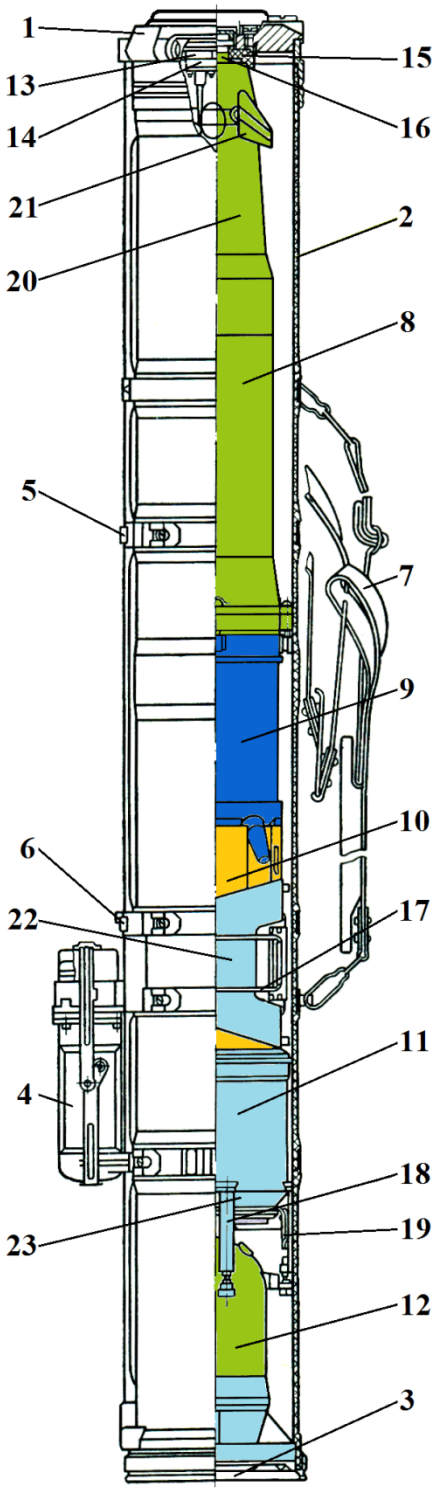	*1 - Front cover of launcher tube;* *2 - Launcher tube;* *3 - Rear cover of launcher tube;* *4 - Power supply block* *5 - Front mounting launcher tube;* *6 - Rear mounting launcher tube;* *7 - Carrying belt;* *8 - Warhead;* *9 - Rocket flight motor;* *10 - Instrumental part;* *11 - Steering wire coil and infrared lamp;* *12 - Launch Motor;* *13 - Body fork connections Ш4;* *14 - Body socket connections Ш4;* *15 - Body fork connections Ш1б;* *16 - Socket connections Ш1а;* *17 - Stirrup;* *18 - Support;* *19 - Spring;* *20 - Nose part with servo mechanism and contact part;* *21 - Rudder wing;* *22 - Stabilising wing;* *23 - Infrared lamp with cover* *24 - Type of warhead - „K“ - HEAT;* *25 - Index of warhead;* *26 - Series of warhead filling - year of warhead filling;* *27 - Explosive type of hollow charge;* *28 - Index of missile;* *29 - Series - year manufacture of missile;* *30 - Serial number of missile;* *31 - Series - year completing missile with launcher tube;*

MISSILE	CUTAWAY OF MISSILE (probable construction)	LEGEND
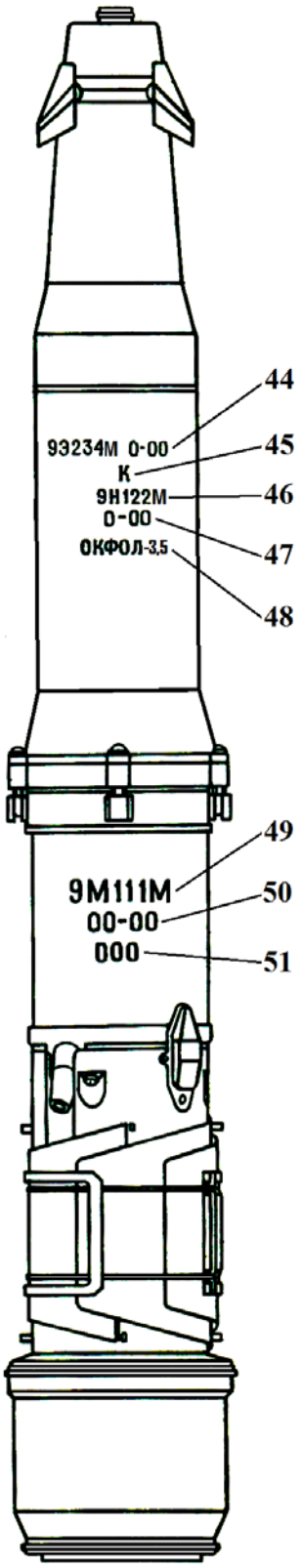	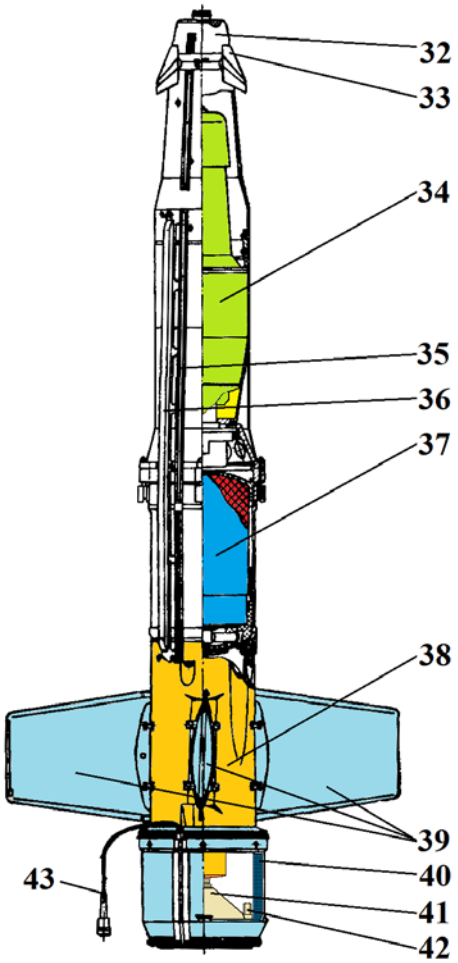	*32 – Control block head section;* *33 - Rudder wing;* *34 - Warhead;* *35 - Groove;* *36 - Aerodynamic cover;* *37 - Rocket flight motor;* *38 - Instrumental part;* *39 - Stabilising wings;* *40 - Steering wire coil;* *41 - Infrared lamp;* *42 - Gas switch;* *43 - Control and power cable with fork;* *44 - Index of fuze and number of manufacture series of fuze;* *45 - Type of warhead - „K“ - cumulative effect;* *46 - Index of warhead;* *47 - Series of warhead filling - year of warhead filling;* *48 - Explosive type of hollow charge;* *49 - Index of missile;* *50 - Series - year manufacture of missile;* *51 - Serial number of missile;*
	MISSILE IN FLIGHT (MAKET)	
	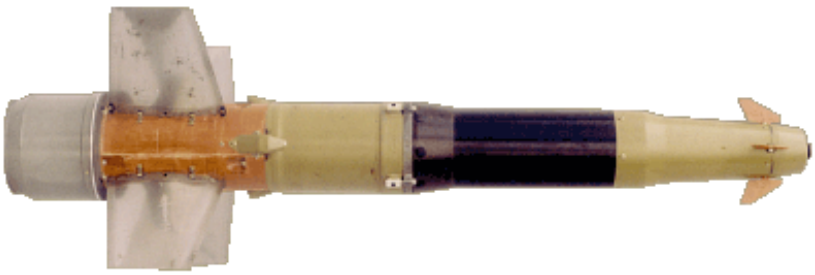	

FLIGHT MOTOR	WARHEAD (probable construction)	LEGEND
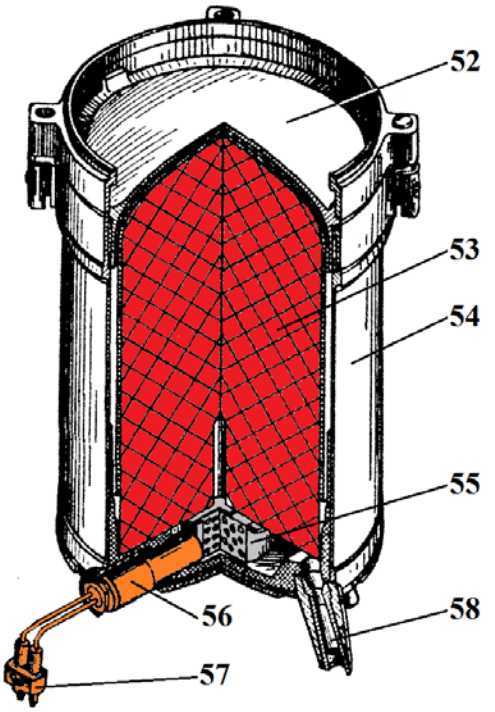	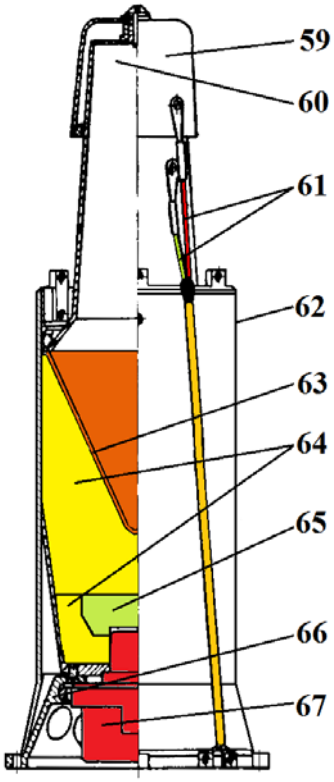	*52 - Cover;* *53 - Propellant of flight motor;* *54 - Combustion chamber;* *55 - Igniter;* *56 - Electrical primer 9X237;* *57 - Connecting fork;* *58 - Nozzle of flight motor;* *59 - Outer cone of contact attachment;* *60 - Inner cone of contact attachment;* *61 - Electrical cables;* *62 - Body of hollow charge;* *63 - Shaped charge liner (cumulative insert);* *64 - Upper and bottom hollow charges;* *65 - Insert;* *66 - Transitional bottom;* *67 - Fuze;*
LAUNCH MOTOR		
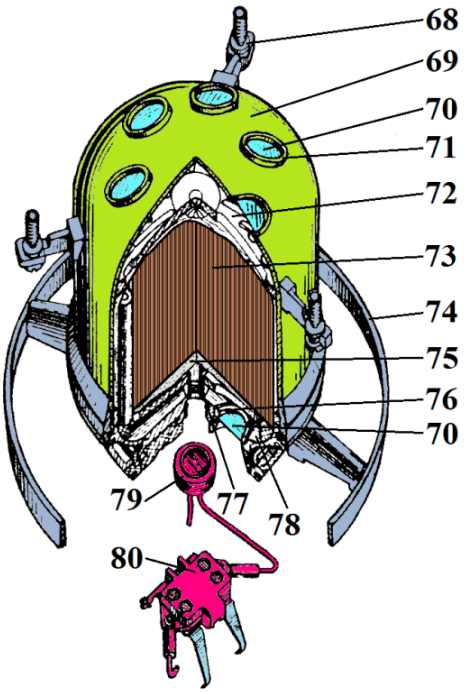 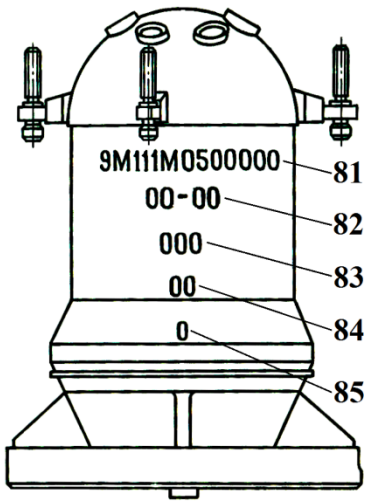		*68 - Holder screw;* *69 - Combustion chamber;* *70 - Membrane;* *71 - Front insert;* *72 - Front grid;* *73 - Propellant of launch motor;* *74 - Aerodynamic strut;* *75 - Igniter;* *76 - Rear insert;* *77 - Connecting tube;* *78 - Jet block;* *79 - Electrical primer 9X284;* *80 - Contact block;* *81 - Drawing number;* *82 - Series - year manufacture of launch motor;* *83 - Serial number;* *84 - Year of filling;* *85 - The number of the ring which governs the critical section between the body launch motor and launcher tube.*

	FWP Ammunition	ANNEX B-10

FIELD of AMMUNITION	*anti-tank artillery*
CALIBER	*135 mm*
NAME	*135 mm High Explosive Anti-Tank Guided Missile*
TYPE	*HEAT*
NAME/ASSIGNED MARK (original)	*9M113*
COUNTRY of ORIGIN	*Union of Soviet Socialist Republics* *Czechoslovakia*
DEPLOYMENT METHOD	*Fired by for example:* *9П135М, 9П148, БМП-1П,2, БМД- 2,3*

MISSILE 9M113

abbreviation	*9M113-K*	**warhead marking**	*9H131M*
another name	*КОНКУРС*	**weight of warhead [*kg*]**	*2.7*
NATO reporting name	*AT-5 SPANDREL* *AT-5A SPANDREL A*	**type of explosive**	*ОКФОЛ*
		weight of explosive [*kg*]	
guidance system	*SACLOS - wire-guided*	**type of fuze**	*9Э234М*
weight with container [*kg*]	*25.16*	**armour penetration [*mm*] / angle collision [°]**	*300/60;* *600/90*
length of container [*mm*]	*1263*		
weight of missile [*kg*]	*14.5*	**marking of launch motor**	*ВДУ*
length of missile [*mm*]	*1150*	**propellant of launch motor**	*9Х180*
range stabilization wings [*mm*]	*468*	**electrical primer launch motor**	*9Х284*
maximum range (of fire) [*m*]	*4000 by day* *3500 at night*	**marking of flight motor**	*РМДУ*
		propellant of flight motor	*9Х179-1*
minimum range (of fire) [*m*]	*75*	**electrical primer flight motor**	*9Х237-1*
average speed [$m.s^{-1}$]	*208*		
time of flight [*s*]	*19*		

PACKING

Number of missiles in the crate	*1*	**Weight of full crate with missile [*kg*]**	*47*

DESCRIPTION

9M113 КОНКУРС (Contest) is used to engage armoured targets, especially tanks and armoured vehicles. This rocket consists of a warhead (17), rocket flight motor (21), rocket launch motor (28) and fuze (20).

COLOR and MARKING

Body colour:	**container:**	*Olive*
	control block; flight motor, launch motor	*Black*
	warhead, instrumental part	*Silver grey*
Text colour:		*Black*

FUZE

Type	Characteristic
9Э234М	*Fuze - impact, electromechanical, secured with mask safety and self-destroying function.*

SAFETY CONSIDERATION THREAT

Do not touch and do not move unexploded missile projectile.

NOTICE

DRAWINGS/CUTAWAY/MARKING/STENCILING		LEGEND
CONTAINER	MISSILE CUTTING	
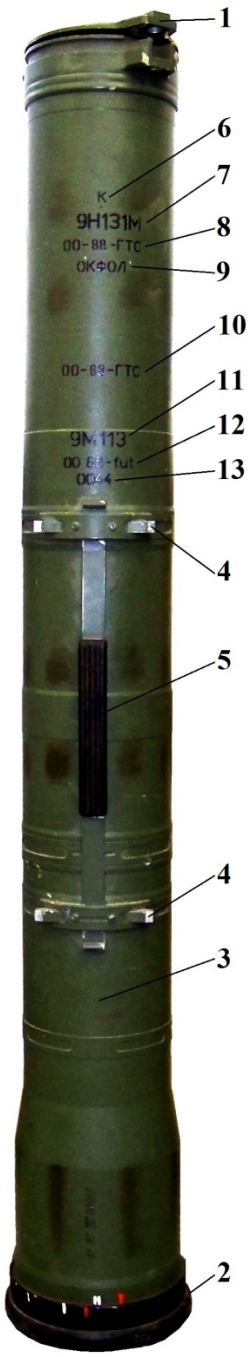	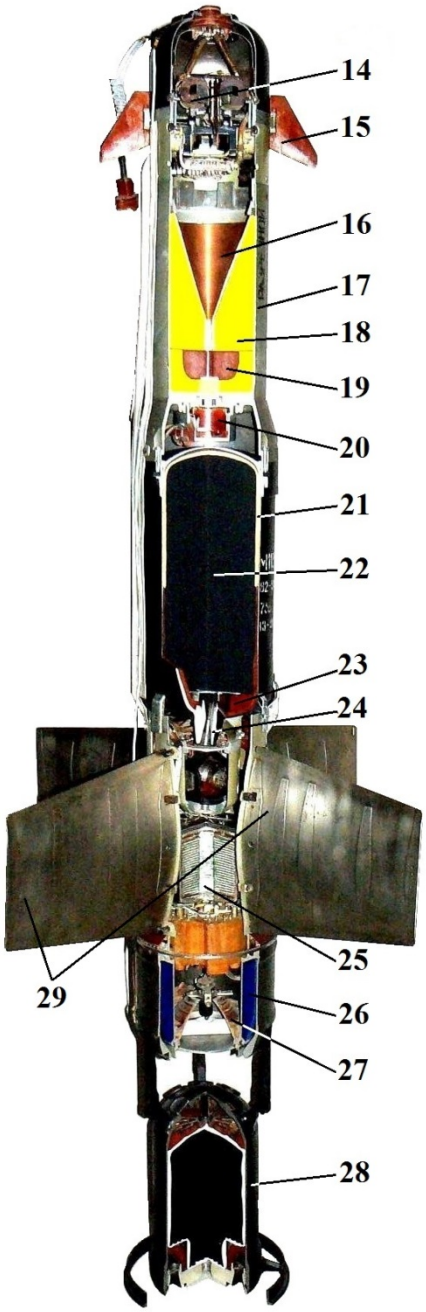	*1 - Front cover launcher tube;* *2 - Rear cover launcher tube;* *3 - Launcher tube - body of container;* *4 - Upper mounting launcher tube;* *5 - Handle;* *6 - Type of warhead - „K“ - cumulative effect;* *7 - Index of warhead;* *8 - Series - year of warhead filling - index of manufacturer;* *9 - Explosive type of hollow charge;* *10 - Series - year - index of manufacturer completing missile with launcher tube;* *11 - Index of missile;* *12 - Series - year manufacture of missile- index of manufacturer;* *13 - Serial number of missile;* *14 – Control block head section;* *15 - Rudder wings;* *16 - Shaped charge liner (cumulative insert);* *17 - Body of warhead;* *18 - Hollow charges;* *19 - Insert;* *20 - Fuze;* *21 - Combustion chamber of rocket flight motor;* *22 - Propellant of flight motor;* *23 - Place for Igniter and Electrical primer* *24 - Nozzle of flight motor;* *25 - Battery and instrumental part;* *26 - Steering wire coil;* *27 - Infrared lamp;* *28 - Launch Motor;* *29 - Stabilising wing;*

MISSILE IN FLIGHT	MISSILE CUTTING	LEGEND
	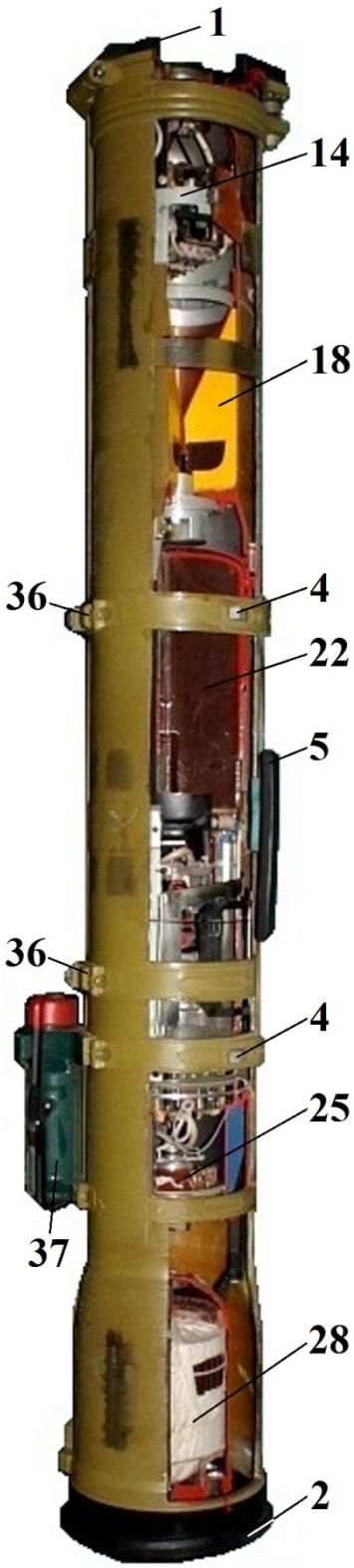	*1 - Front cover launcher tube;* *2 - Rear cover launcher tube;* *4 - Upper mounting launcher tube;* *5 - Handle;* *14 – Control block head section;* *15 - Rudder wings;* *18 - Hollow charges;* *22 - Propellant of flight motor;* *24 - Nozzle of flight motor;* *25 - Battery and instrumental part;* *28 - Launch Motor;* *29 - Stabilising wing;* *30 - Aerodynamic cover;* *31 - Index of missile;* *32 - Series - year manufacture of missile- index of manufacturer;* *33 - Serial number of missile;* *34 - Series - year - index of rocket flight motor manufacturer;* *35 - Steering wire coil and infrared lamp;* *36 - Bottom mounting launcher tube;* *37 - Power supply block;*

LAUNCH MOTOR	LEGEND
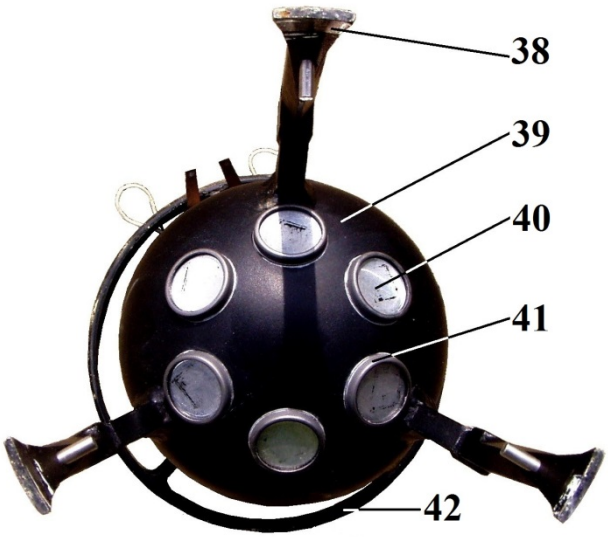 	*38 - Holders;* *39 - Combustion chamber;* *40 - Membranes;* *41 - Front inserts;* *42 - Aerodynamic strut;* *43 - Holder screw;* *44 - Index of missile;* *45 - Series - year manufacture of missile- index of manufacturer;* *46 - Serial number of missile;* *47 - Series - year - index of rocket launch motor manufacturer;* *48 - Electrical primer;* *49 - Contact block;* *50 - Jet block.*

	FWP Ammunition	ANNEX B-11

FIELD of AMMUNITION	*anti-tank artillery*
CALIBER	*135 mm*
NAME	*135 mm Tandem High Explosive Anti-Tank Guided Missile*
TYPE	*Tandem shaped charge - HEAT*
NAME/ASSIGNED MARK (original)	*9M113M*
COUNTRY of ORIGIN	*Union of Soviet Socialist Republics* *Czechoslovakia*
DEPLOYMENT METHOD	*Fired by* *9П135М, 9П138, 9П148, БМП-2, БМД-3, 4*

MISSILE 9M113

abbreviation	*9M113M*	**warhead marking**	
another name	*КОНКУРС-М*	**weight of warhead [*kg*]**	*2.75*
NATO reporting name	*AT-5B SPANDREL B*	**type of explosive**	
guidance system	*SACLOS - wire-guided*	**weight of explosive [*kg*]**	*1.5*
weight with container [*kg*]	*26.5*	**type of fuze**	
length of container [*mm*]	*1263*	**armour penetration [*mm*] / angle collision [°]**	*300/60* *800/90*
weight of missile [*kg*]	*16.5*		
length of missile [*mm*]	*1150*	**marking of launch motor**	
range stabilization wings [*mm*]	*468*	**propellant of launch motor**	
maximum range (of fire) [*m*]	*4000 by day* *3500 at night*	**electrical primer launch motor**	
		marking of flight motor	
minimum range (of fire) [*m*]	*75*	**propellant of flight motor**	
average speed [$m.s^{-1}$]	*206*	**electrical primer flight motor**	
time of flight [*s*]	*19.2*	**igniter of flight motor**	

PACKING

Number of missiles in the crate	*1*	**Weight of full crate with missile [*kg*]**	*49.8*

DESCRIPTION

9M113M КОНКУРС-М (Contest-M) is used to engage armoured targets, especially tanks with dynamic armours and armoured vehicles. This rocket consists of a tandem warhead (2), rocket light motor (3), launch motor and fuze.

COLOR and MARKING

Body colour:	**container:**	*Olive*
	flight motor, launch motor	*Black*
	control block, warhead, instrumental part	*Silver grey*
Text colour:		*Black*

FUZE

Type	Characteristic
ГВМЗ-1	*Fuze is adiabatic, unsecured type (adiabatic igniter fuse is initiated by compressing the air chamber moving the striker on rocket impact).*

SAFETY CONSIDERATION THREAT

Do not touch and do not move unexploded rocket projectile.

NOTICE

Missile's container and launch motor is similar to that of missile 9M113.

DRAWINGS/CUTAWAY/MARKING/STENCILING		LEGEND
	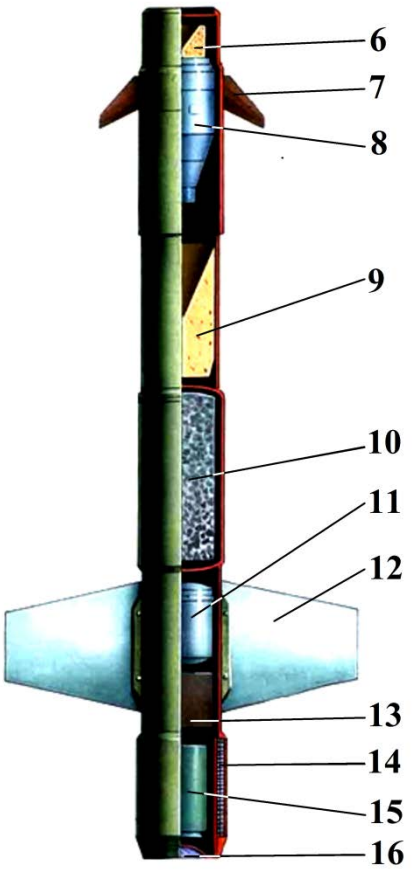	*- Control and initiation part;* *2 - Tandem warhead - HEAT;* *3 - Rocket light motor;* *4 - Instrumental and stabilizing part;* *5 - Steering wire coil with infrared lamp;* *6 - The shifted forward part of tandem HEAT;* *7 - Head section with control block;* *8 - Rudder wings;* *9 - Main part of tandem HEAT;* *10 - Rocket light motor;* *11 - Gyro unit;* *12 - Stabilizing wings;* *13 - Battery;* *14 - Steering wire coil;* *15 - Instrumental part;* *16 - Infrared lamp;*

	FWP Ammunition	ANNEX B-12

FIELD of AMMUNITION	*anti-tank artillery*
CALIBER	*100 mm*
NAME	*100 mm High Explosive Anti-Tank Guided Missile*
TYPE	*HEAT*
NAME/ASSIGNED MARK (original)	*9M117 (3UBK10-1)*
COUNTRY of ORIGIN	*Union of Soviet Socialist Republics*
DEPLOYMENT METHOD	*Fired by for example:* *9K116-1 Bastion missile system - 100mm rifled gun of tank T-55 - for example D10-T2SA/SK*

MISSILE 9M117

abbreviation	*9M117*	**time of flight [*s*]**	*13*
another name	*БАСТИОН*	**warhead marking**	*9H136M*
NATO reporting name	*AT-10 STABBER*	**weight of warhead [*kg*]**	
guidance system	*SACLOS - by laser beam*	**type of explosive**	*ОКФОЛ 3.5*
		weight of explosive [*kg*]	
weight of cartridge 3UBK10-1 [*kg*]	*26.5*	**type of fuze**	*9Э256*
length of cartridge 3UBK10-1 [*mm*]	*1098*	**armour penetration [*mm*] / angle collision [°]**	*275/60; 550/90*
weight of missile 9M117 [*kg*]	*17.6*		
length of missile PM117[*mm*]	*1084*	**type of ejector charge**	*liquid CO_2*
range stabilization wings [*mm*]	*255*	**electrical igniter of ejector charge**	*9X436 + 9X295*
maximum range (of fire) [*m*]	*4000*	**flight motor**	*9X919*
minimum range (of fire) [*m*]	*100*	**electrical igniter flight motor**	*9X436 + 9X296*
average speed [$m.s^{-1}$]	*370*	**type of laser**	*YAG:Nd - 1.06μm*

PACKING

Number of rocket in the crate	*2*	**Weight of full crate with rockets[*kg*]**	*75*

DESCRIPTION

9M117 БАСТИОН (Bastion) is used to engage armoured targets, especially tanks and armoured vehicles. This rocket consists of a warhead (8), rocket flight motor (9), rocket launch motor (12) and fuze (67).

COLOR and MARKING

Body colour:	**warhead**	*Olive*
	flight motor	*Black*
	cartridge case	*Light grey*
Text colour:	**warhead and cartridge case assembly**	*Black*
	flight motor	*White*

FUZE

Type	Characteristic
9Э256	*Fuze -base, impact, electromechanical, secured with mask safety and self-destroying function.*

SAFETY CONSIDERATION THREAT

Do not touch and do not move unexploded missile rocket projectile.

NOTICE

DRAWINGS/CUTAWAY/MARKING/STENCILING:		LEGEND
Cartridge	**Missile of flight**	
		1 - Warhead; *2 - Cartridge case assembly;* *3 - Control block;* *4 - Guide ring;* *5 - Rocket flight motor;* *6 - Power supply block;* *7 - Instrumental part;* *8 - Gyro block;* *9 - Stabilizers block;* *10 - Stabilising wings;* *11 - Block stabilization of laser guidance;* *12 - Infrared lamp;* *13 - Optical laser signal receiver;*
	Bottom of missile	
	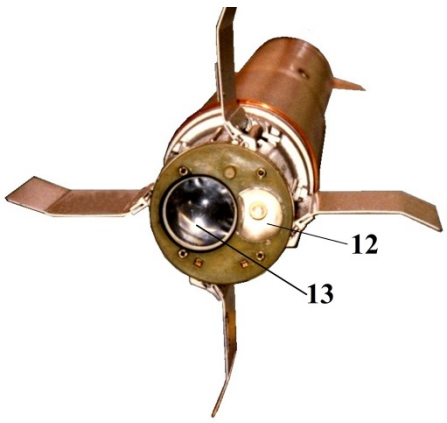	

CUTAWAY OF CARTRIDGE AND MISSILE

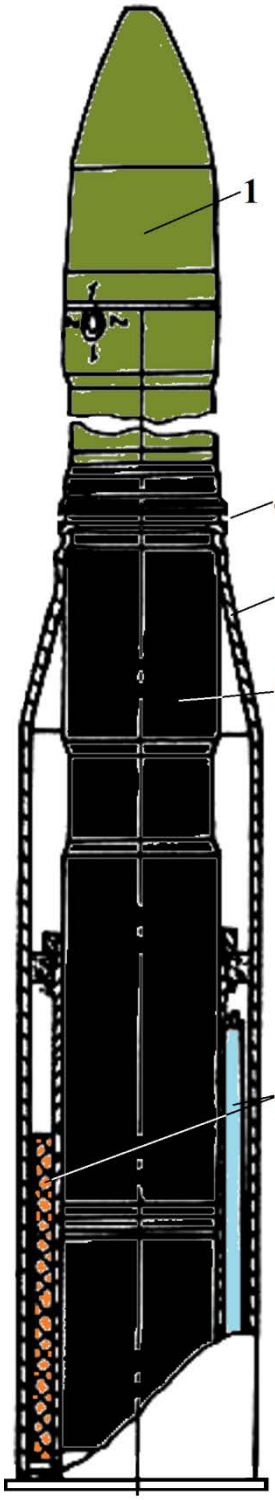

WARHEAD

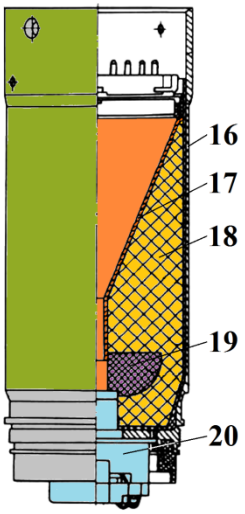

FLIGHT MOTOR

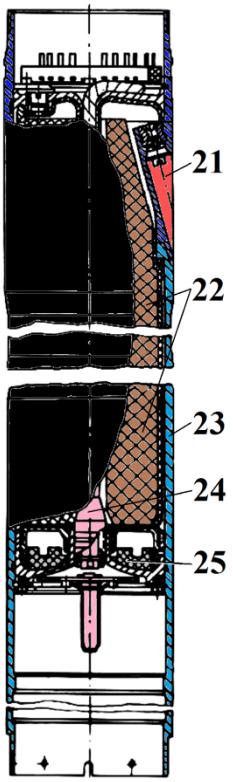

CARTRIDGE CASE ASSEMBLY

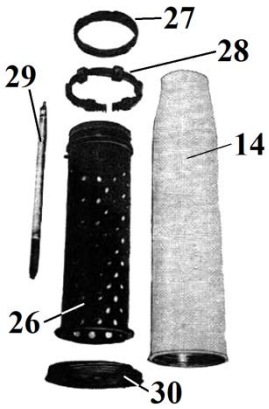

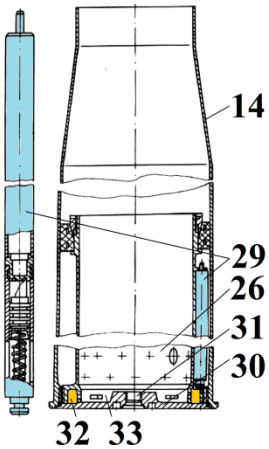

LEGEND

1 - Warhead;
4 - Guide ring;
5 - Rocket flight motor;
14 - Cartridge case;
15 - Ejection charges - CO_2 bottles;
16 - Body of hollow charge;
17 - Shaped charge liner (cumulative insert);
18 - Hollow charge;
19 - Insert;
20 - Fuze;
21 - Nozzle of flight motor;
22 - Propellant of flight motor;
23 - Combustion chamber;
24 - Igniter 9X436 of flight motor;
25 - Amplifying charge 9X296;
26 - Net body;
27 - Nut;
28 - Spacer ring;
29 - CO_2 bottle;
30 - Bottom of cartridge case;
31 - Place for primer;
32 - Auxiliary powder charge;
33 - Place for igniter 9X295 of ejection charges with electrical primer 9X436;

FLIGHT MOTOR	WARHEAD	LEGEND
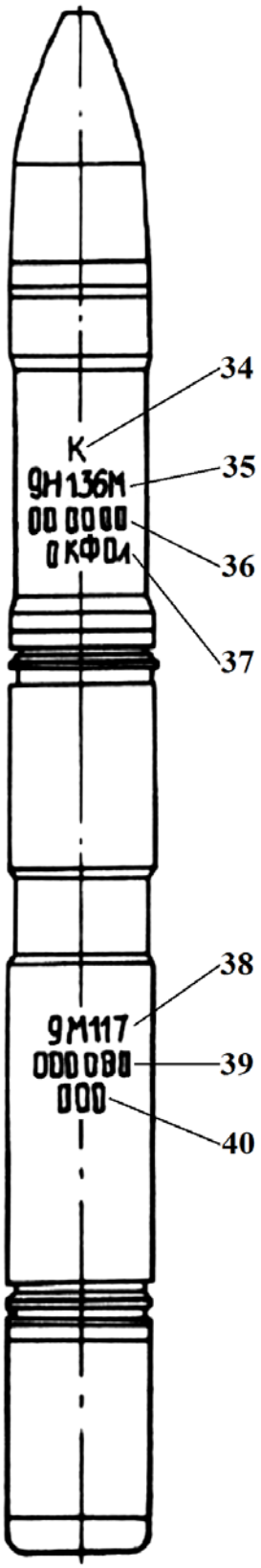	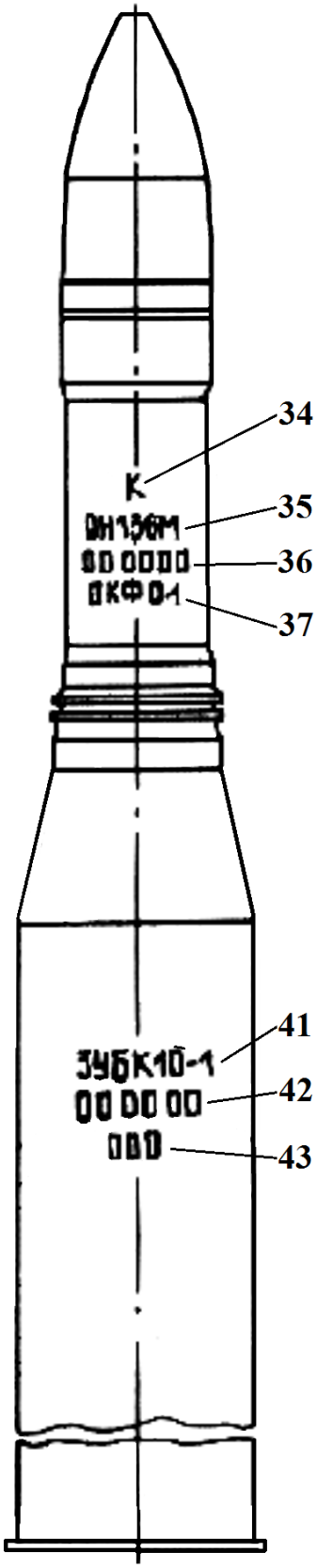	*34 - Type of warhead;* *35 - Index of warhead;* *36 - Series - year manufacture of warhead and index of warhead manufacturer;* *37 - Type of explosive;* *38 - Index of missile;* *39 - Number of department, year manufacture of missile and index of manufacturer;* *40 - Serial number of missile;* *41 - Index of cartridge;* *42 - Number of department, year manufacture of cartridge and index of manufacturer;* *43 - Serial number of cartridge*

	FWP Ammunition	ANNEX B-13

FIELD of AMMUNITION	*Anti-aircraft artillery*
CALIBER	*120 mm*
NAME	*High Explosive – Anti-aircraft Fragmentation Guided Missile*
TYPE	*HE-FRAG*
NAME/ASSIGNED MARK (original)	*9M37, 9M37M, 9M37MD, 9M333*
COUNTRY of ORIGIN	*Union of Soviet Socialist Republics*
DEPLOYMENT METHOD	*Fired by self-propelled SAM system 9K35 Стрела-10, 9K35M Стрела-10M, 9K35M2 Стрела-10M2, 9K35M3 Стрела-10M3*

MISSILES

abbreviation	**9M37**	**9M37M**	**9M37MD**	**9M333**
another name	*9K35 Стрела-10CB*	*9K35M Стрела-10M*	*9K35M2 Стрела-10M2*	*9K35M3 Стрела-10M3*
NATO reporting name	*SA-13 Gopher*	*SA-13 Gopher*	*SA-13 Gopher*	*SA-13 Gopher*
weight of missile [*kg*]	*39.2*	*39.2*	*41*	*41*
missile weight in container [*kg*]	*70*	*70*	*72*	*72*
length of missile [*mm*]	*2190*	*2190*	*2230*	*2230*
wingspan diameter [*mm*]	*360*	*360*	*360*	*360*
index of rod warhead	*9H125*	*9H125*		*9H317*
weight of rod warhead [*kg*]	*2.7*	*2.7*	*5*	*5*
weight of explosive [*kg*]	*1.07*	*1.07*	*2.63*	*2.63*
guidance	*9Э47 "Вираж" PbS cooled photocontrast seeker, single band IR seeker*	*9Э47M "Вираж" PbS cooled photocontrast seeker, single band IR seeker*	*9Э47M3 "Вираж" PbS cooled photocontrast seeker, single band IR seeker*	*9Э425 dual mode seeker with dual band passive IR and optical photo contrast*
effective range [*km*]	*0.8 to 5*	*0.8 to 5*	*0.8 to 5*	*0.5 to 5*
maximum intercept altitude [*km*]	*3.5*	*3.5*	*3.5*	*3.5*
average speed [$m.s^{-1}$]	*517*	*517*	*550*	*550*
maximum speed of the target approaching/receding [$m.s^{-1}$]	*417/310*	*417/310*	*417/310*	*417/310*
self-destruction [*s*]	---	---	---	*29±5*
time ensuring missile [*s*]	*14 - 16*	*14 - 16*	*14 - 16*	---
initiation devices	*contact and noncontact*	*contact and noncontact*	*contact and noncontact*	*contact and noncontact*
type of fuzes (tree pcs)	*-proximity; -impact; -Safe and Arm mechanism*	*-proximity; -impact; -Safe and Arm mechanism*	*-proximity; -impact; -Safe and Arm mechanism*	*-8-ray laser proximity; -impact; -self-destruction mechanism*

PACKING

Number of rocket in the crate	*1*	**Weight of full crate with rocket in container[*kg*]**	*~110*

DESCRIPTION

9M37, 9M37M, 9M37MD and 9M333 are used for destruction of low flying targets - aircraft and helicopters. Missiles consist of warhead (5), rocket motor (7), guidance head (1), electronic block with autopilot (4) and fuzes (6).

DRAWINGS/CUTAWAY/STENCILING	LEGEND
9M37, 9M37M	*1 - Guidance head;* *2 – Rudder actuator block;* *3 - Rudders;* *4 - Electronic block;* *5 - Rod warhead;* *6 - Noncontact and contact fuzes;* *7 - Rocket motor;* *8 - Stabilizing wings;* *9 - Wings arm inclination;* *10 - Block inclination;* *11 - Propellant of rocket motor;* *12 - Nuzzle;* *13 - Expanding rod warhead;* *14 - Index of missile;* *15 - Series and year of manufacture missile;* *16 - Serial number of missile;* *17 - Missile container;* *18 - Serial number of guidance head;* *19 - Serial number of block inclination*

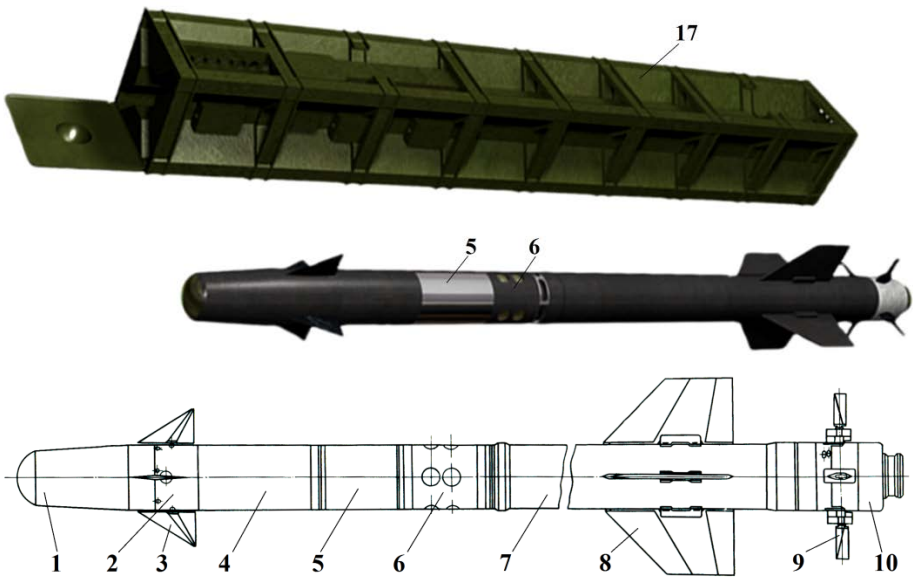

Rod warhead of 9M37M without cover	Rocket motor of 9M37M
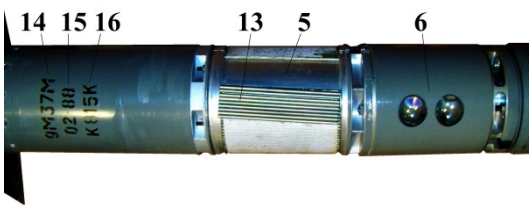	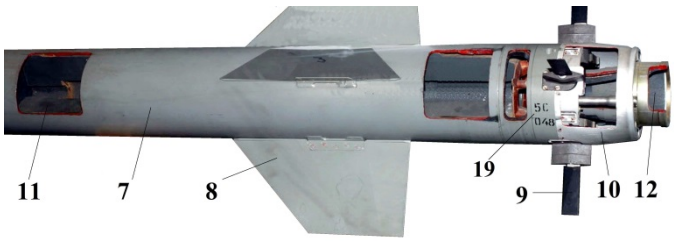

9M37MD, 9M333

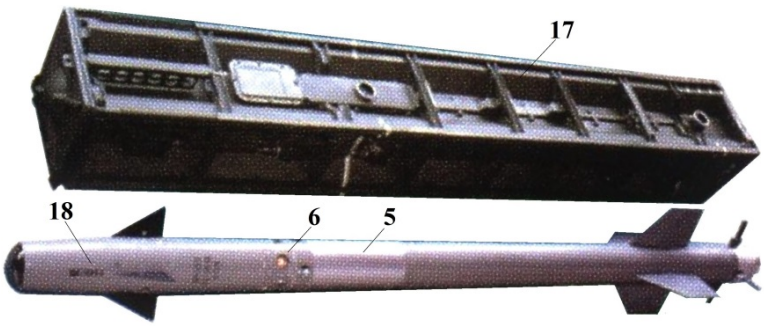

COLOR and MARKING

Body colour:	*Light grey*
Text colour:	*Black*

SAFETY CONSIDERATION THREAT

Do not touch and do not move unexploded rocket projectile.

NOTICE

Rods of rod warhead are attached to a fiberglass fabric and placed loosely around the rod warhead. Safe and arm mechanism is located in the rod warhead.

	FWP Ammunition	ANNEX B-14

FIELD of AMMUNITION	*Anti-aircraft artillery*
CALIBER	*72 mm*
NAME	*High Explosive – Anti-aircraft Fragmentation Guided Missile*
TYPE	*HE-FRAG*
NAME/ASSIGNED MARK (original)	*9M32, 9M32M*
COUNTRY of ORIGIN	*Union of Soviet Socialist Republics and Czechoslovakia*
DEPLOYMENT METHOD	*Fired by 9K32 for 9M32M Стрела-2, 9K32M for Стрела-2M*

MISSILES

abbreviation	**9M32**	**9M32M**
another name	*9K32 Стрела-2*	*9K32M Стрела-2M*
NATO reporting name	*SA-7A Grail*	*SA-7B Grail*
weight of missile [*kg*]	*9.15*	*9.80*
missile weight in container [*kg*]	*14.5*	*15.0*
length of missile without wings [*mm*]	*1420*	*1440*
length of container [*mm*]	*1490*	*1500*
index of guidance head	*9Э42*	*9Э46*
index of warhead		*9H15M*
weight of warhead [*kg*]	*1.17*	*1.17*
weight of A-IX-20 explosive [*kg*]	*0.37*	*0.37*
weight of rocket motor propellant [*kg*]		*4.20*
guidance	*single channel with thermal guidance head*	
effective range of the target departure [*km*]	*3.40*	*4.20*
effective range of the target arrivals [*km*]		*2.80*
maximum target height [*km*]	*0.05 to 1.50*	*0.05 to 2.30*
missile speed when leaving the container [$m.s^{-1}$]		*28*
average speed [$m.s^{-1}$]	*430*	*500*
maximum speed of the target approaching/receding [$m.s^{-1}$]	*--/220*	*150/260*
self-destruction [*s*]	*12 to 15*	*14 to 17*
index of fuze	*9Э22*	*9Э22M*
type of fuze	*electromechanical, contact - gusty, with mask safety, self-destruct function*	

PACKING

Number of rocket in the crate	*2*	**Weight of full crate (9Я68) with rockets in container [*kg*]**	*59*

DESCRIPTION

9M32, 9M32M are used for destruction of low flying targets - aircraft and helicopters. Missiles consist of warhead (5), rocket motor (7), guidance head (1), electronic block with autopilot (4) and fuzes (6).

COLOR and MARKING

Body missile colour:	*Light grey*	**Text colour of missile:**	*Black*

SAFETY CONSIDERATION THREAT

Do not touch and do not move unexploded rocket projectile.

NOTICE

Inert warheads are black and have white text.

DRAWINGS/CUTAWAY/STENCILING	LEGEND
9K32M	*1 - Missile 9M32M;* *2 - Container of 9K32M;* *3 - Trigger mechanism;* *4 - Buzzer; 5 - Rear fixing mechanism; 6 - Front fixing mechanism; 7 - Power supply block; 8 - Locking pawl of gyroscope; 9 - Carrying strap;* *10 - Guidance head; 11 - Front of centring collar; 12 - Rudders;* *13 - Control block; 14 - Warhead;* *15 - Fuze; 16 - Rocket motor;* *17 - Back of centring collar;* *18 - Stabilizing wings;* *19 - Index of inert warhead;* *20 - Index of inert fuze;* *21 - Body of warhead;* *22 - Bursting charge;* *23 - Booster charge;* *24 - Detonator; 25 - Block of fuze; 26 - Body of fuze;* *27 - Index of container;* *28 - Series - year of manufacture missile - index of manufacturer;* *29 - Serial number of container;* *30 - Index of missile; 31 - Serial number of missile; 32 - Marking of warhead effect; 33 - Index of guidance head; 34 - Serial number of guidance head;* *35 - Marking of warhead effect;* *36 - Index of warhead;* *37 - Series - year of warhead manufacture - index of manufakturer; 38 - Index of explosive; 39 - Serial number of warhead; 40 - Index of fuze - index of manufacturer - series - year of fuze manufacture;* *41 - Serial number of fuze;* *42 - Index of missile;* *43 - Series - year of missile manufacture - index of manufakturer;* *44 - Series - year of missile assembly - index of assembly factory*
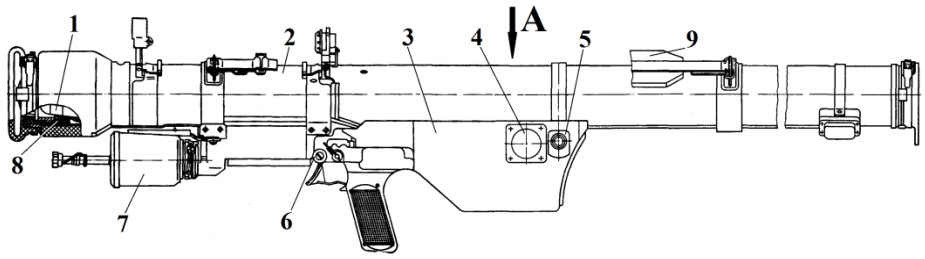	
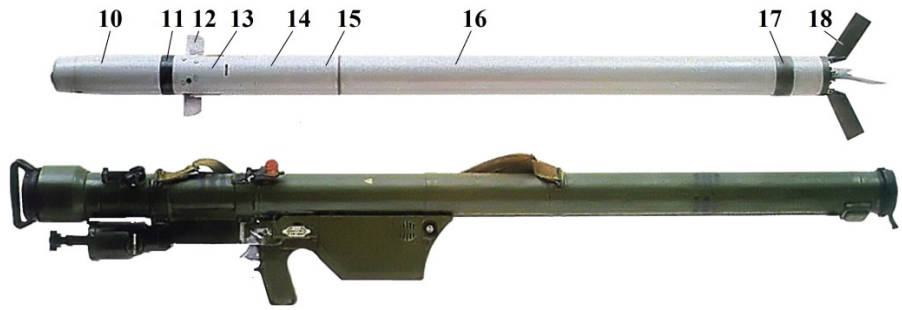	
Missile 9M32M-Pract. with INERT warhead	
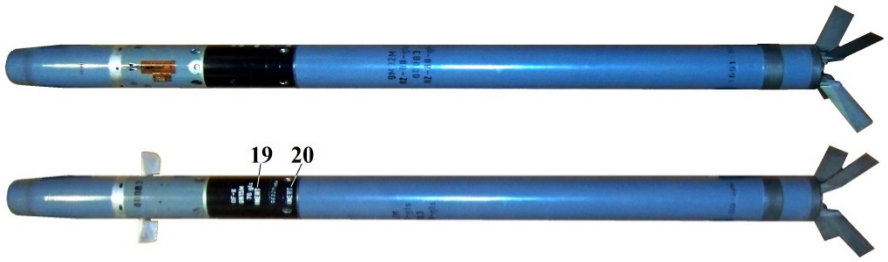	
Warhead of 9M32M with fuze block	**VIEW "A"**
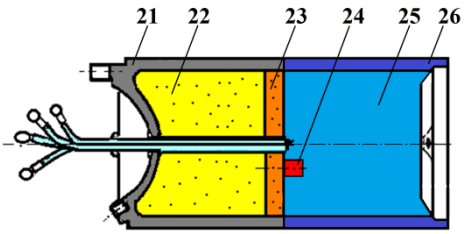	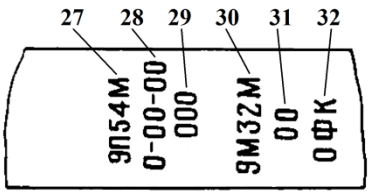
9M32M	
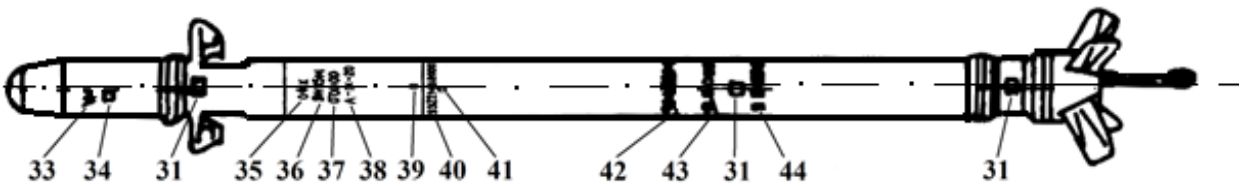	

	FWP Ammunition	ANNEX B-15

FIELD of AMMUNITION	*Anti-aircraft artillery*
CALIBER	*72 mm*
NAME	*High Explosive - Fragmentation Guided Rocket*
TYPE	*HE-FRAG*
NAME/ASSIGNED MARK (original)	*Игла (Igla)/9M313, 9M39, 9M342*
COUNTRY of ORIGIN	*Union of Soviet Socialist Republics*
DEPLOYMENT METHOD	*Fired by system and variants of Игла*

MISSILES

abbreviation	**9M313**	**9M39**	**9M342**
another name	*9K310 Игла-1*	*9K38 Игла*	*9K338 Игла-C*
NATO reporting name	*SA-16 Gimlet*	*SA-18 Grouse*	*SA-24 Grinch*
weight of missile [*kg*]	*10.8*	*10.6*	*11.7*
weight, full system, ready to shoot [*kg*]	*17.9*	*17.9*	*19*
length of missile [*mm*]	*1673*	*1638*	*1635*
length of container [*mm*]	*1700*	*1708*	
wingspan diameter [*mm*]	360	360	360
weight of warhead [*kg*]	*1.17*	*1.17*	*2.5*
weight of explosive [*kg*]	*0.390*	*0.390*	*.585*
type of explosive	*HMX*	*HMX*	*HMX*
guidance - seeker head type; seeker scanning	*nitrogen-cooled, Indium antimonide (InSb); FM-modulated*	*9Э410 - nitrogen-cooled, Indium antimonide (InSb) and uncooled lead sulphide (PbS); FM-modulated*	*FM-modulated*
seeker notes	*Tripod-mounted nosecone to reduce supersonic wave drag*	*Aero spike to reduce supersonic wave drag*	
height of target engagement [*km*]	*0.01 to 2.5*	*0.01 to 3.5*	*0.01 to 3.5*
maximum intercept altitude [*km*]	*1.0 to 5.2*	*0.5 to 5.2*	*0.5 to 6.0*
missile speed when leaving the container [$m.s^{-1}$]	*19 to 22*	*19 to 22*	*19 to 22*
average speed [$m.s^{-1}$]	*570*	*570*	*600*
maximum speed of the target approaching/receding [$m.s^{-1}$]	*360/320*	*360/320*	*400/320*
self-destruction [*s*]	*14 - 17*	*14 - 17*	*14 - 17*
type of warhead	*Directed-energy blast fragmentation*	*Directed-energy blast fragmentation*	*Directed-energy blast fragmentation*
type of fuzes	*Delayed impact, magnetic and grazing with self-destruction.*	*Delayed impact, magnetic and grazing with self-destruction.*	*Two fuzes – contact and noncontact – laser. Delayed impact, magnetic and grazing.*

PACKING

Number of rocket in the crate	*2*	**Weight of full crate with rocket in container[*kg*]**	*~68*

DESCRIPTION

Systems and variants of Игла missiles are used for destruction of low flying targets - aircraft and helicopters. Missiles consist of warhead (5), rocket motor (7), guidance head (1), electronic block with autopilot (4) and fuzes (6).

DRAWINGS/CUTAWAY/STENCILING

9M313 with 9K310 Игла-1

9M39 with 9K38 Игла

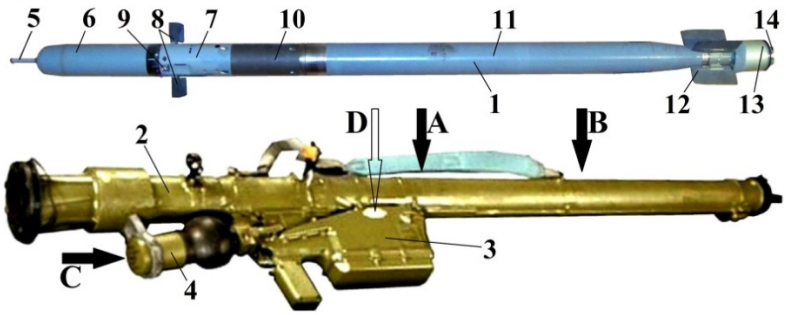

VIEW “A”	VIEW “B”	VIEW “C”	VIEW “D”
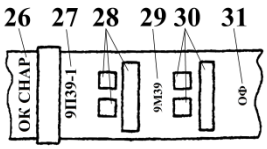	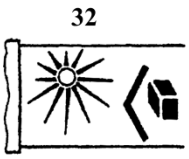	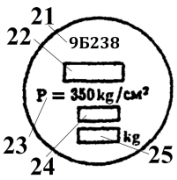	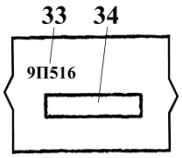

LEGEND

1 - Guidance head;
2 – Rudder actuator block;
3 - Rudders;
4 - Electronic block;
5 - Warhead;
6 - Noncontact and contact fuzes;
7 - Rocket motor;
8 - Stabilizing wings;
9 - Wings arm inclination;
10 - Block inclination;
11 - Propellant of rocket motor;
12 - Nuzzle;
13 - Expanding rod warhead;
14 - Index of missile;
15 - Series and year of manufacture missile;
16 - Serial number of missile;
17 - Missile container;
18 - Serial number of guidance head;
19 - Serial number of block inclination

9M342 with 9K338 Игла-С

WARHEAD OF 9M39

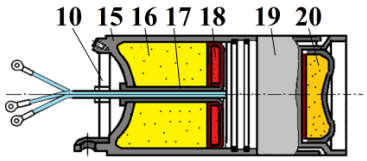

LAUNCH MOTOR OF 9M342

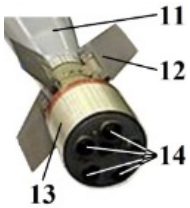

	FWP Ammunition	ANNEX B-16

FIELD of AMMUNITION	*artillery*
CALIBER	*132 mm*
NAME	*132 mm High Explosive - Fragmentation Fin Stabilised Rocket*
TYPE	*HE-FRAG*
NAME/ASSIGNED MARK (original)	*ОФ-941 (М-13)* *ОФ-942 (М-13УК)*
COUNTRY of ORIGIN	*Union of Soviet Socialist Republics*
DEPLOYMENT METHOD	*Fired by* *БМ-13Н, БМ-13 НМ or БМ-13 НМ М*

CARTRIDGE M-13		**CARTRIDGE M-13УК**	
abbreviation	*ОФ-941*	**abbreviation**	*ОФ-942*
weight [*kg*]	*42.36*	**weight [*kg*]**	*42.36*
length [*mm*]	*1465*	**length [*mm*]**	*1465*
fighting weight [kg]	*21.30*	**fighting weight [kg]**	*21.30*
type of explosive	*T*	**type of explosive**	*T*
weight of explosive [*kg*]	*4.90*	**weight of explosive [*kg*]**	*4.90*
weight of rocket motor [*kg*]	*20.80*	**weight of rocket motor [*kg*]**	*20.80*
weight of TPH of rocket motor [*kg*]	*7.05 - 7.13*	**weight of TPH of rocket motor [*kg*]**	*7.05 - 7.13*
thrust engine [$kg.\ s^{-1}$]	*2000*	**thrust engine [$kg.\ s^{-1}$]**	*1900*
the length of active arc [*m*]	*125*	**the length of active arc [*m*]**	*120*
start velocity [$m.s^{-1}$]	*70*	**start velocity [$m.s^{-1}$]**	*70*
maximum velocity [$m.s^{-1}$]	*355*	**maximum velocity [$m.s^{-1}$]**	*355*
maximum range (of fire) [*m*]	*8470*	**maximum range (of fire) [*m*]**	*7900*
type of fuze	*ГВМЗ-1*	**type of fuze**	*ГВМЗ-1*

PACKING

Number of rocket in the crate		**Weight of full crate with rockets[*kg*]**	

DESCRIPTION

ОФ-941 and ОФ-942 is used to engage personnel, destroy gun positions, trenches and shelters. This rocket projectile consists of grenade - body (2), rocket motor (6), rocket engine nozzle bottom (8) and fuze (1).

COLOR and MARKING

Body colour:	*Olive*
Text colour:	*Black*

FUZE

Type	**Characteristic**
ГВМЗ-1	*Fuze is adiabatic, unsecured type (adiabatic igniter fuse is initiated by compressing the air chamber moving the striker on rocket impact).*

SAFETY CONSIDERATION THREAT

Do not touch and do not move unexploded rocket projectile.

NOTICE

Brake rings are not used for M-13 (ОФ-941).

DRAWINGS/CUTAWAY/MARKING/STENCILING			LEGEND
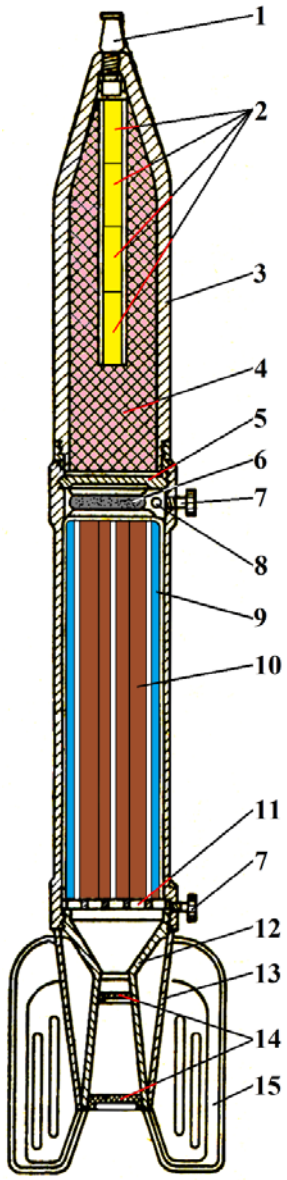	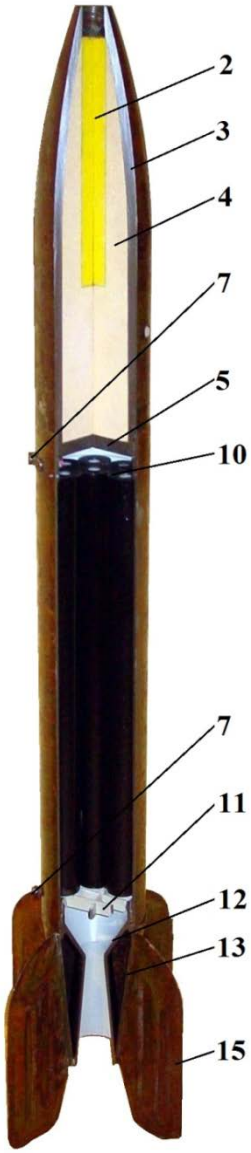	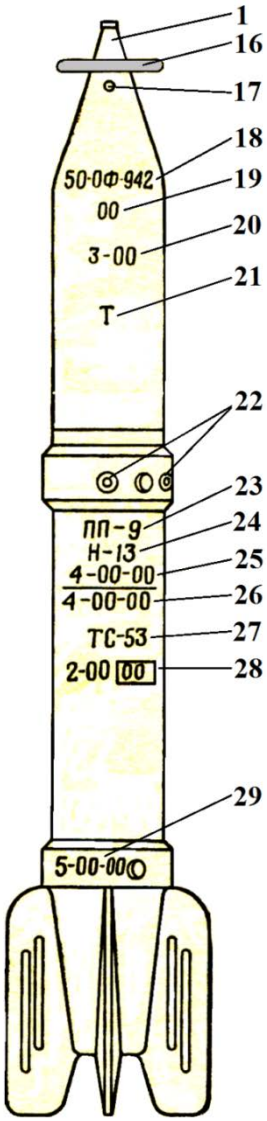	*1 - Fuze;* *2 - Booster charge;* *3 - Body of grenade;* *4 - Bursting charge;* *5 - Bottom of grenade;* *6 - Igniter;* *7 - Electrical contact of primer;* *8 - Primer;* *9 - Body of rocket engine;* *10 - Seven-grain pipe TPH;* *11 - Bottom of the rocket motor;* *12 - Rocket engine nozzle;* *13 - Ballistic cover;* *14 - Cardboard covers;* *15 - Stabilizing wings;* *16 - Brake ring;* *17 - The locking screw;* *18 - Marking of cartridge;* *19 - Number of filling factory;* *20 - Series and year of filling;* *21 - Type of explosive;* *22 - Pyrotechnic initiators;* *23 - Marking of ignition cap;* *24 - Type of powder of rocket motor;* *25 - Series - year manufacture of powder and code manufacturer;* *26 - Series of powder from manufacturer - year manufacture and code manufacturer;* *27 - Ballistic coefficient;* *28 - Series - year filling of cartridge and code manufacturer;* *29 - Series - year filling of rocket motor´s parts and code manufacturer;* *30 - „ОФ-942” - Marking of cartridge;* *31 - Marking of size the brake rings:* *- М - small - diameter 90 mm* *- Б - big - diameter 125 mm*
CROSS-SECTION of the rocket motor		**BRAKE RING**	
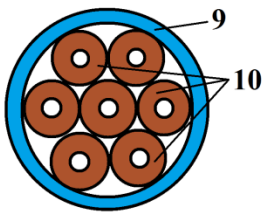		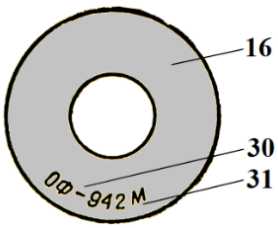	

	FWP Ammunition	**ANNEX B-17**

FIELD of AMMUNITION	*artillery*
CALIBER	*130 mm*
NAME	*130 mm High Explosive - Fragmentation Spin Stabilised Rocket*
TYPE	*HE-FRAG*
NAME/ASSIGNED MARK (original)	*130-JRRO-RM 51*
COUNTRY of ORIGIN	*Czechoslovakia*
DEPLOYMENT METHOD	*Fired by* *130 mm M51 32-tube MRS (130 RM 51)*

CARTRIDGE		PROJECTILE		ROCKET ENGINE	
abbreviation	*130-JRRO-RM 51*	**abbreviation**	*130-JRROv*	**abbreviation**	*RM*
average weight [*kg*]	*24.20*	**weight [*kg*]**	*20.066*	**type of rocket charge**	*Dg tp*
		length [*mm*]	*760*	**weight of rocket charge [*kg*]**	*4.56*
length [*mm*]	*805*	**type of explosives**	*TNT*		
max. velocity [$m.s^{-1}$]	*410*	**weight of blasting filler [*kg*]**	*2.33*	**type of igniter**	*A1-Ba + Black powder "A"*
maximum range (of fire) [*m*]	*8280*	**type of fuze**	*nz 60v*	**weight of igniter[*kg*]**	*0.050*
				type of primer	*ZR-11a*

PACKING

Number of rocket in the crate	*2*	**Weight of full crate with rockets[*kg*]**	*55*

DESCRIPTION

130-JRRO-RM 51 is used to engage personneldestroy gun positions, trenches and shelters. This rocket projectile consists of grenade - body (2), rocket engine (6), rocket engine nozzle bottom (8) and fuze (1).

COLOR and MARKING

All body colour:	*Olive*
Text colour on the grenade:	*Red*
Text colour on the rocket engine:	*White*

FUZE

Type	Characteristic
nz 60v	*Nose, impact and inertia fuze with safe separation.*

SAFETY CONSIDERATION THREAT

Do not touch and do not move unexploded rocket projectile.

NOTICE

The initiation of a rocket engine is used by electric spark plug ZR-11a. The letter "v" in the sign fuze and projectile means use Whitworth threads for screwing fuze. When without "v" is used metric thread.

DRAWINGS/CUTAWAY/MARKING/STENCILING	LEGEND
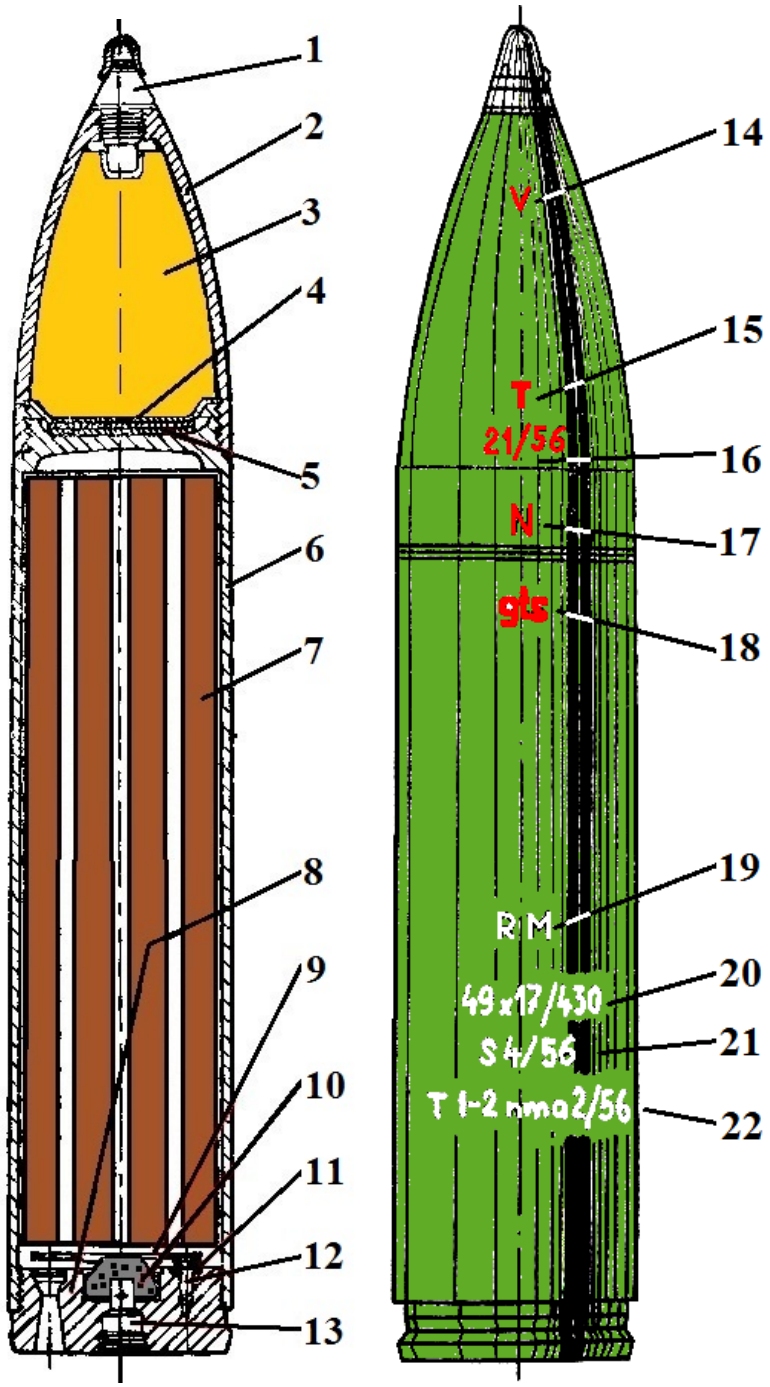	*1 - Fuze;* *2 - Body of grenade;* *3 - Bursting charge;* *4 - Cover;* *5 - Cardboard pads;* *6 - Body of rocket motor;* *7 - Rocket charge;* *8 - Rocket engine nozzle bottom;* *9 - Back-up ring;* *10 - Igniter;* *11 - Spacer;* *12 - Bolt of spacer;* *13 - Primer;* *14 - Type of thread of fuze - Whitworth thread;* *15 - Type of explosives;* *16 - Series and year of production of projectile;* *17 - Weight sign;* *18 - Symbol of filling factory;* *19 - Type of powder of rocket engine;* *20 - Marking of powder shape;* *21 - Marking of series and year of manufacture of powder;* *22 - Type of black powder of igniter and symbol of manufacturer, series, year of manufacture of black powder;* *23 - Marking of manufacturer of rocket engine nozzle bottom;* *24 - Marking of series and year of manufacture of rocket engine nozzle bottom* **Rocket engine nozzle bottom** 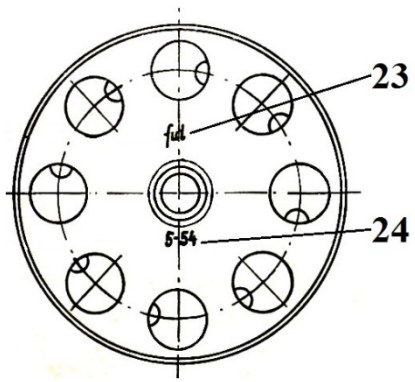

	FWP Ammunition	**ANNEX B-18**

FIELD of AMMUNITION	*artillery*
CALIBER	*130 mm*
NAME	*130 mm High Explosive - Fragmentation Spin Stabilised Rocket*
TYPE	*HE-FRAG*
NAME/ASSIGNED MARK (original)	*130-JRROF-RM 51*
COUNTRY of ORIGIN	*Czechoslovakia*
DEPLOYMENT METHOD	*Fired by 130 mm M51 32-tube MRS (130 RM 51)*

CARTRIDGE		PROJECTILE		ROCKET ENGINE	
abbreviation	*130-JRROF-RM 51*	**abbreviation**	*130-JRROFv*	**abbreviation**	*RM*
average weight [*kg*]	*24.20*	**weight [*kg*]**	*20.066*	**type of rocket charge**	*Dg tp*
		length [*mm*]	*760*	**weight of rocket charge [*kg*]**	*4.56*
length [*mm*]	*805*	**type of explosives**	*TNT*		
max. velocity [$m.s^{-1}$]	*410*	**weight of blasting filler [*kg*]**	*2.33*	**type of igniter**	*Black powder T1-2*
maximum range (of fire) [*m*]	*8280*	**type of fuze**	*nz 62v*	**weight of igniter[*kg*]**	*0.075*
				type of primer	*ZR-11a*

PACKING

Number of rocket in the crate	*2*	**Weight of full crate with rockets[*kg*]**	*56*

DESCRIPTION

130-JRROF-RM 51 is used to engage personnel, destroy gun positions, trenches and shelters. This rocket projectile consists of grenade - body (2), rocket engine (6), rocket engine nozzle bottom (8) and fuze (1).

COLOR and MARKING

All body colour:	*Olive*
Text colour on the grenade:	*Red*
Text colour on the rocket engine:	*White*

FUZE

Type	Characteristic
nz 62v	*Delay action fuze, nose, impact and inertia fuze with safe separation.*

SAFETY CONSIDERATION THREAT

Do not touch and do not move unexploded rocket projectile.

NOTICE

The initiation of a rocket engine is used by electric spark plug ZR-11a. The letter "v" in the sign fuze and projectile means use Whitworth threads for screwing fuze. When without "v" is used metric thread.

DRAWINGS/CUTAWAY/MARKING/STENCILING	LEGEND
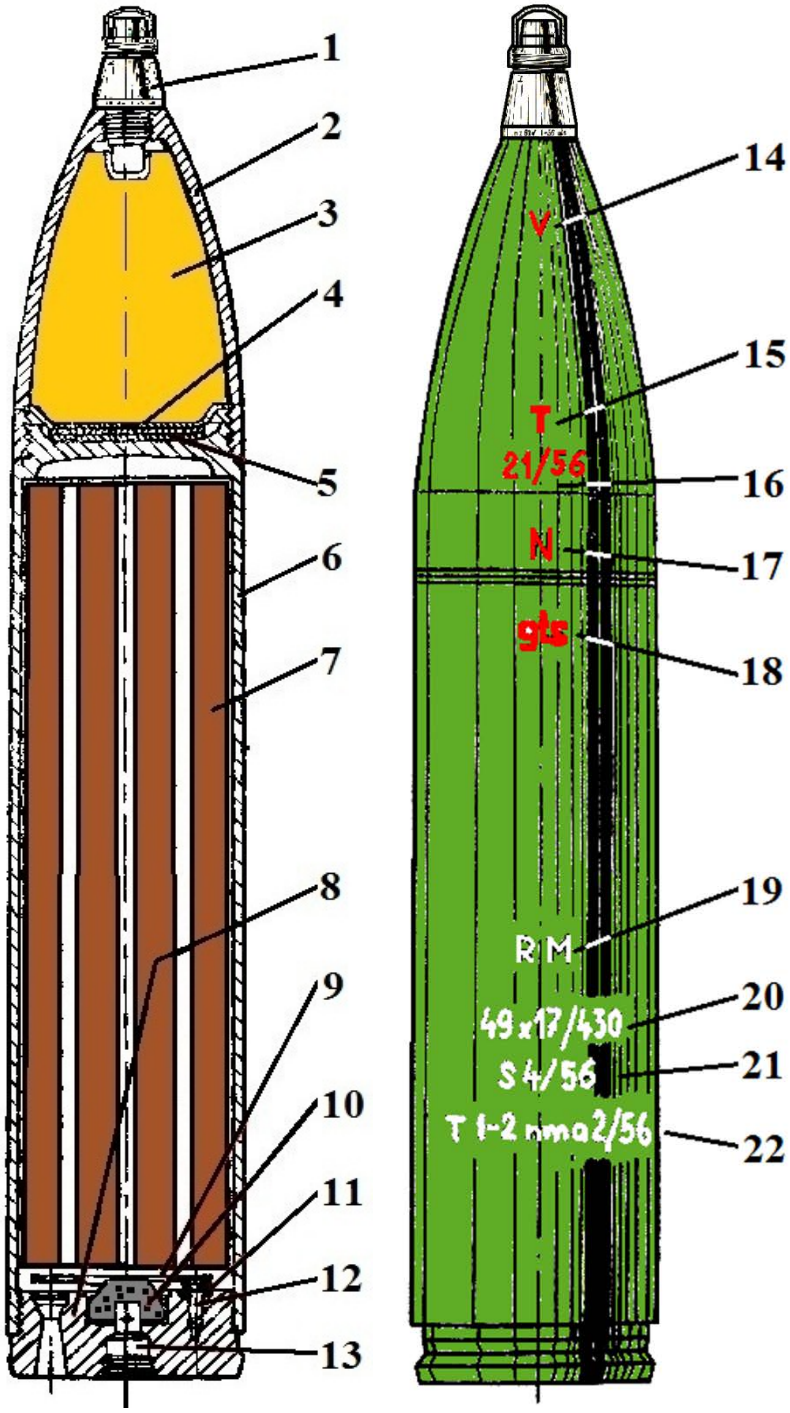	*1 - Fuze;* *2 -Body of grenade;* *3 - Bursting charge;* *4 - Cover;* *5 - Cardboard pads;* *6 - Body of rocket engine;* *7 - Rocket charge;* *8 - Rocket engine nozzle bottom;* *9 - Back-up ring;* *10 - Igniter;* *11 - Spacer;* *12 - Bolt of spacer;* *13 - Primer;* *14 - Type of thread of fuze - Whitworth thread;* *15 - Type of explosives;* *16 - Series and year of production of projectile;* *17 - Weight sign;* *18 - Symbol of filling factory;* *19 - Type of powder of rocket engine;* *20 - Marking of powder shape;* *21 - Marking of series and year of manufacture of powder;* *22 - Type of black powder of igniter and symbol of manufacturer, series, year of manufacture of black powder;* *23 - Marking of manufacturer of rocket engine nozzle bottom;* *24 - Marking of series and year of manufacture of rocket engine nozzle bottom*
	Rocket engine nozzle bottom 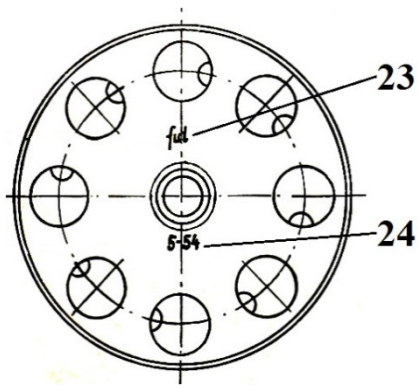

	FWP Ammunition	ANNEX B-19

FIELD of AMMUNITION	*artillery*
CALIBER	*130 mm*
NAME	*130 mm High Explosive - Fragmentation Spin Stabilised Rocket – Practice*
TYPE	*HE-FRAG - Practice*
NAME/ASSIGNED MARK (original)	*130-JRRONh-RM 51*
COUNTRY of ORIGIN	*Czechoslovakia*
DEPLOYMENT METHOD	*Fired by 130 mm M51 32-tube MRS (130 RM 51)*

CARTRIDGE		PROJECTILE		ROCKET ENGINE	
abbreviation	*130-JRRONh-RM 51*	**abbreviation**	*130-JRRONhv*	**abbreviation**	*RM*
average weight [*kg*]	*24.20*	**weight [*kg*]**	*20.066*	**type of rocket charge**	*Dg tp*
		length [*mm*]	*760*	**weight of rocket charge [*kg*]**	*4.56*
length [*mm*]	*805*	**type of explosives**	---		
max. velocity [$m.s^{-1}$]	*410*			**type of igniter**	*A1-Ba + Black powder "A"*
maximum range (of fire) [*m*]	*8280*	**weight of indifferent material [kg]**	*2.33*	**weight of igniter[*kg*]**	*0.050*
		type of fuze	*dummy*	**type of primer**	*ZR-11a*

PACKING

Number of rocket in the crate	*2*	**Weight of full crate with rockets[*kg*]**	*55*

DESCRIPTION

130-JRRONh-RM 51 is used for training and testing the engagement of personnel, destroying gun positions, trenches and shelters. This rocket projectile consists of grenade - body (2), rocket engine (6), rocket engine nozzle bottom (8) and fuze (1).

COLOR and MARKING

All body colour:	*Olive*
Text colour on the grenade:	*Red*
Text colour on the rocket engine:	*White*

FUZE

Type	Characteristic
dummy	*Fuze without explosives.*

SAFETY CONSIDERATION THREAT

Fired projectile may be touched and moved..

NOTICE

The initiation of a rocket engine is used by electric spark plug ZR-11a.
The letter "v" in the sign fuze and projectile means use Whitworth threads for screwing fuze. When without "v" is used metric thread.

DRAWINGS/CUTAWAY/MARKING/STENCILING	LEGEND
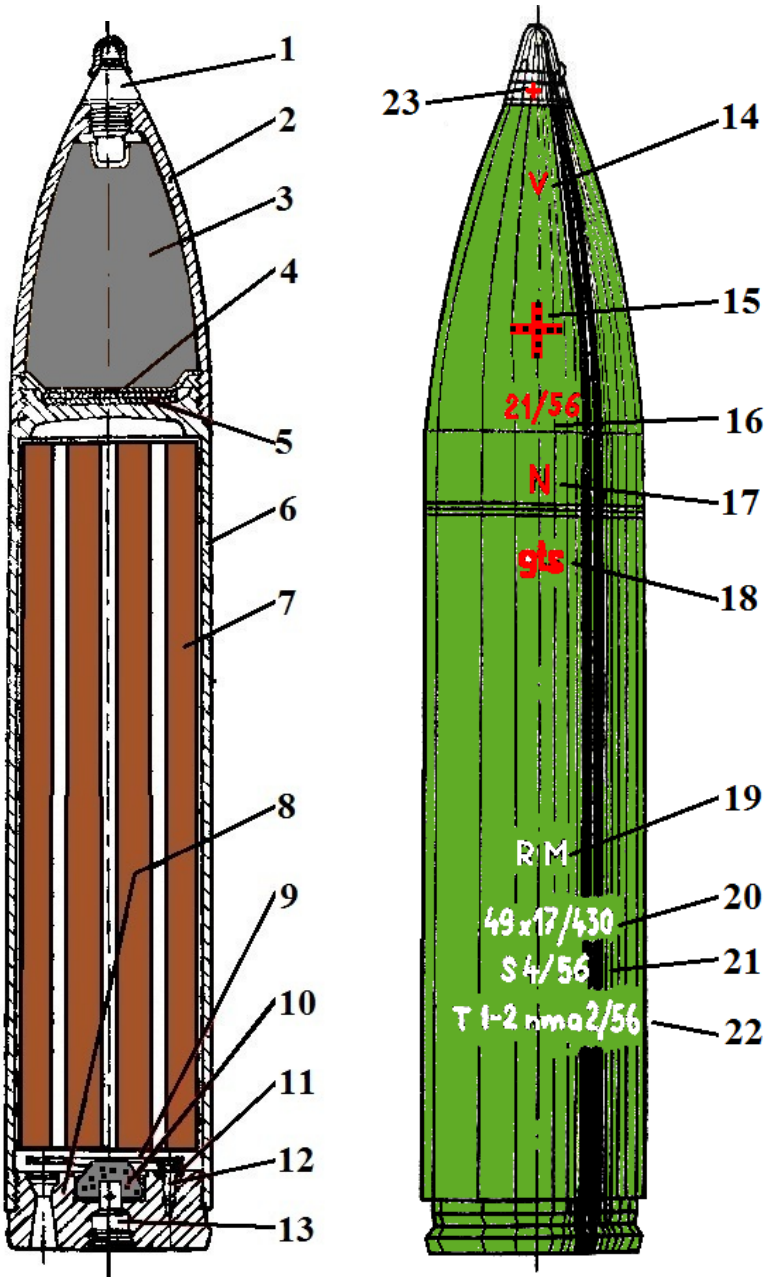	*1 - Fuze - dummy;* *2 - Body of grenade;* *3 - Inert matter;* *4 - Cover;* *5 - Cardboard pads;* *6 - Body of rocket engine;* *7 - Rocket charge;* *8 - Rocket engine nozzle bottom;* *9 - Back-up ring;* *10 - Igniter;* *11 - Spacer;* *12 - Bolt of spacer;* *13 - Primer;* *14 - Type of thread of fuze - Whitworth thread;* *15 - Red cross - Marking of type grenade;* *Type of explosives;* *16 - Series and year of production of projectile;* *17 - Weight sign;* *18 - Symbol of filling factory;* *19 - Type of powder of rocket engine;* *20 - Marking of shape of powder;* *21 - Marking of series and year of manufacture of powder;* *22 - Type of black powder of igniter and symbol of manufacturer, series, year of manufacture of black powder;* *23 - Red cross - Marking of fuze-dummy;* *24 - Marking of manufacturer of rocket engine nozzle bottom;* *25 - Marking of series and year of manufacture of rocket engine nozzle bottom;* **Rocket engine nozzle bottom** 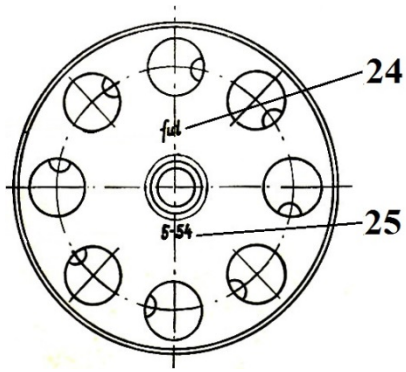

	FWP Ammunition	ANNEX B-20

FIELD of AMMUNITION	*artillery*
CALIBER	*122 mm*
NAME	*122 mm High Explosive - Fragmentation Fin Stabilised Non - Guided Rocket*
TYPE	*HE-FRAG*
NAME/ASSIGNED MARK (original)	*122-JROF-RM70* *M-21 ОФ*
COUNTRY of ORIGIN	*Czechoslovakia and Union of Soviet Socialist Republics*
DEPLOYMENT METHOD	*Fired by* *122mm RM-70, RM-70/85, RM-70/85M, Modular and systems, for example: 9K51 Град (БМ-21 and БМ-21K), 9K59 Прима, 9K54 «Град-В», «Град-ВД», «9K55 Град-1», « Lightweight, portable rocket system Град-П», 22 pcs launcher «А-215 Град-М», and others.*

ROCKET 122-JROF-RM70		ROCKET M-21 ОФ			
abbreviation	*122-JROF-RM70*	**abbreviation**	*9M22У*	*9M22У-1*	*9M22*
weight of rocket [*kg*]	*66.78*	**weight of rocket [*kg*]**	*66.78*	*66.60*	*65.72*
length (with fuze) [*mm*]	*2870*	**length (with fuze) [*mm*]**	*2870*	*2870*	*2870*
weight of warhead [kg]	*19.20*	**weight of warhead [kg]**	*19.20*	*19.20*	*18.40*
type of explosive	*TGAF-5*	**type of explosive**	*ТГАФ-5*	*ТГАФ-5*	*ТГАФ-5*
weight of explosive [*kg*]	*6.35*	**weight of explosive [*kg*]**	*6.40*	*6.40*	*6.40*
type of propellant of rocket motor	*TPH-G* *RSI-12M*	**type of propellant of rocket motor**	*РСИ-12М* *РСТ-4К*	*РСИ-12М*	*РСИ-12М*
weight of propellant of rocket motor [*kg*]	*20.58*	**weight of propellant of rocket motor [*kg*]**	*20.58*	*20.58*	*20.45*
type of igniter	*9CH227* *9CH227-M5*	**type of igniter**	*9X227*	*9X227*	*9X227*
weight of igniter [*kg*]	*0.080*	**weight of igniter [*kg*]**	*0.080*	*0.080*	*0.080*
maximum velocity [$m.s^{-1}$]	*700*	**maximum velocity [$m.s^{-1}$]**	*700*	*700*	*700*
maximum range (of fire) [*m*]	*20127*	**maximum range (of fire) [*m*]**	*20127*	*20127*	*20127*
maximum range with big brake ring [*m*]	*11000*	**maximum range with big brake ring [*m*]**	*11000*	*11000*	*11000*
maximum range with small brake ring [*m*]	*15900*	**maximum range with small brake ring [*m*]**	*15900*	*15900*	*15900*
type of fuze	*MRV; MRV-U*	**type of fuze**	*МРВ; МРВ-У*	*МРВ-У*	*МРВ*

PACKING			
Number of rocket in the crate	*1*	**Weight of full crate with rockets[*kg*]**	*100*

DESCRIPTION

122-JROF RM-70 and M-21ОФ are electrically initiated, surface-to-surface, fin- and spin-stabilised rockets used to engage personnel,, destroy gun positions, trenches and shelters. This rocket consists of warhead (B), rocket motor (C), jet bottom with stabilizer (D) and fuze (A).

DRAWINGS/CUTAWAY/STENCILING		LEGEND
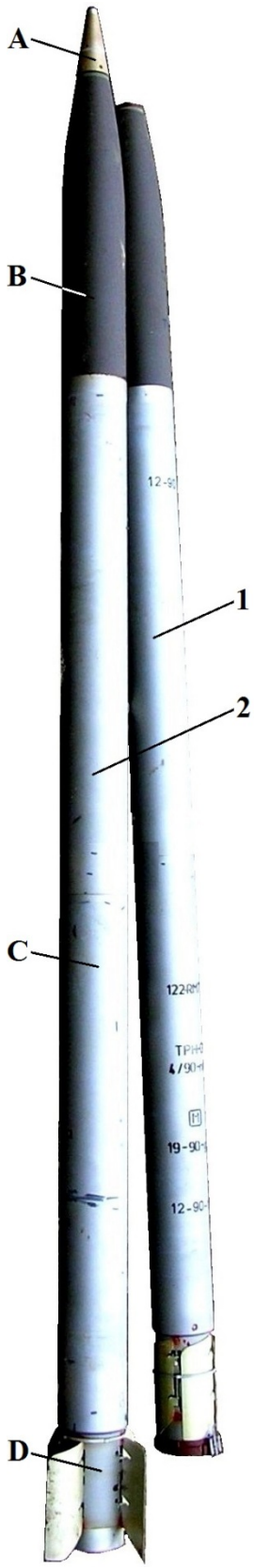	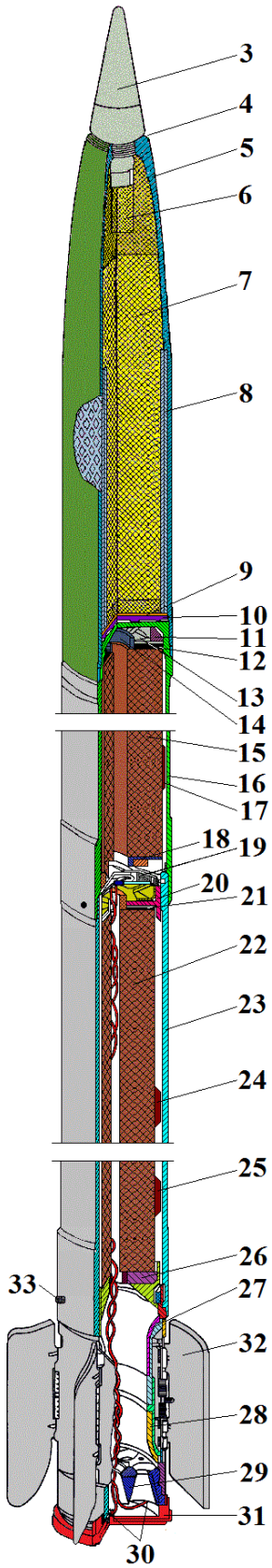	*A - Fuze;* *B - Warhead;* *C - Rocket motor;* *D - jet bottom with stabilizer;* *1 – Rocket is stored without fuze, with plug on the warhead and with cover on bottom of rocket motor;* *2 - Rocket in flight with fuze, without cover of bottom a rocket motor;* *3 - Fuze;* *4 - Place for deployed brake rings;* *5 - Body of warhead;* *6 - Booster charge;* *7 - Bursting charge;* *8 - Sleeve with performed fragments;* *9 - Pad;* *10 - Plug;* *11 - Insert;* *12 - Front bumper;* *13 - Front grid;* *14 - Propellant protector;* *15 - Front propellant;* *16 - Body of front combustion chamber;* *17 - Stump of propellant;* *18 - Central grid;* *19 - Igniter;* *20 - Grid mount;* *21 - Bumper;* *22 - Rear propellant;* *23 - Body of rear combustion chamber;* *24, 25 - Stumps of propellant;* *26 - Rear grid;* *27 - Front cone;* *28 - Rear cone;* *29 - Jet bottom;* *30 - Screws electrical contacts;* *31 - Contact cover;* *32 - Wings;* *33 - Guide pin;*

BRAKING RINGS	LEGEND
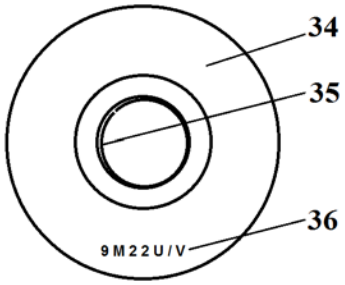 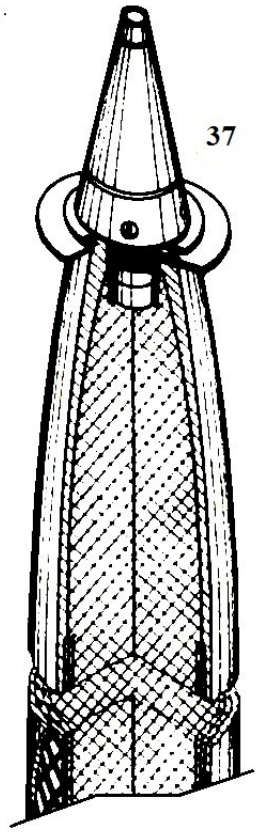	*34 - Large braking ring;* *35 - Fixing spring;* *36 - Marking of braking ring:* *M - „malý“ – small;* *V - „velký“ - large;* *37 - Warhead with large braking ring;*

COLOR and MARKING	
Warhead colour:	*Light or dark grey or olive*
Body colour:	*Silver grey*
Text colour:	*Black*

FUZE	
Type	**Characteristic**
MRV or MPB; *MRV-U or MPB-У*	*Fuzes are a mechanical, nose, point-detonating fuze with selectable super-quick or a short or long delayed action with mask safety.*

SAFETY CONSIDERATION THREAT
Do not touch and do not move unexploded rocket projectile.

NOTICE
Large braking ring has a diameter of 112 mm and a small braking ring has a diameter of 90 mm.

MARKING		LEGEND
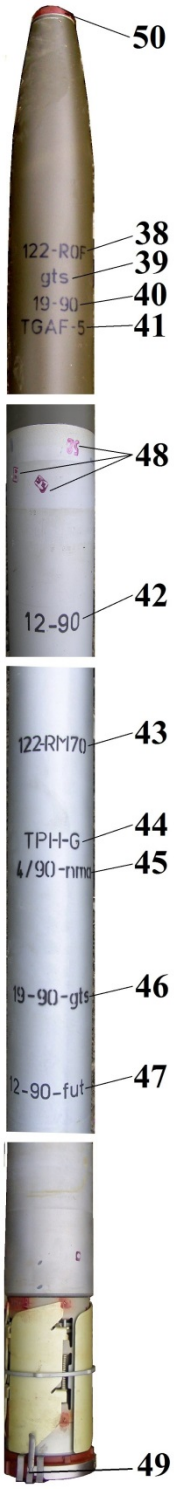	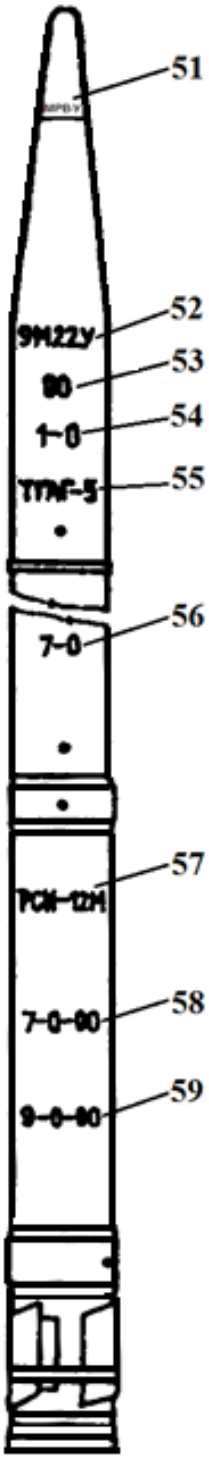	*<u>Marking of Czechoslovakia</u>:* *38 - Index of warhead;* *39 - Number of filling factory;* *40 - Series and year of filling;* *41 - Type of explosive booster charge;* *42 - Series and year mechanical manufacture;* *43 - Marking of weapon;* *44 - Type of propellant;* *45 - Series / year manufacture and code manufacturer of propellant;* *46 - Series - year manufacture and code manufacturer of rocket motor;* *47 - Series - year of filling and number of filling factory of rocket;* *48 - Brands partial checks;* *49 - Shorting contacts;* *50 - Plug* *<u>Marking of USSR</u>:* *51 - Type of fuze;* *52 - Index of rocket;* *53 - Number of filling factory;* *54 - Series and year of filling;* *55 - Type of explosive booster charge;* *56 - Series and year mechanical manufacture;* *57 - Type of propellant;* *58 - Series - year manufacture and code manufacturer of rocket motor;* *59 - Series - year of filling and number of filling factory of rocket*

	FWP Ammunition	ANNEX B-21

FIELD of AMMUNITION	*Artillery rocket*
CALIBER	*544 mm*
NAME	*High Explosive Non - Guided Rocket*
TYPE	*HE-Frag.*
NAME/ASSIGNED MARK (original)	*9M21Ф*
COUNTRY of ORIGIN	*Union of Soviet Socialist Republics*
DEPLOYMENT METHOD	*Fired by* *9K52 Луна-M and modifications:* *9K53 Луна-MB,* *Луна-3,* *9K52TC Луна-TC*

ROCKET 9M21Ф

abbreviation	*9M21Ф*	**running time of main motor [*s*]**	*6 - 12*
abbreviation of rocket motor	*9M21*	**running time of launch motor [*s*]**	*0.22 - 0.44*
another name	*LUNA-M*	**running time of rotary motor [*s*]**	*0.3 - 0.5*
NATO reporting name	*FROG-7A*	**igniter weigh of main motor [*kg*]**	*3.85*
weight of rocket [*kg*]	*2450 ± 1.5 %*	**igniter weigh of launch motor [*kg*]**	*0.87*
length of rocket [*mm*]	*8960*	**igniter weigh of rotary motor [*kg*]**	*0.23*
range stabilization wings [*mm*]	*1700*	**maximum speed [$m.s^{-1}$]**	*1200*
maximum range (of fire) [*m*]	*68000*	**index of warhead**	*9H18Ф*
minimum range (of fire) [*m*]	*12000*	**weight of warhead [*kg*]**	*420*
solid propellant (type НМФ-2Д) weight of main motor [*kg*]	*1090*	**type of explosive**	*ТГ 40/60*
		weight of explosive [*kg*]	*200*
solid propellant (type РСИ-60) weight of launch motor [*kg*]	*40*	**type of fuze**	*9Э29*
solid propellant weight of rotary motor [*kg*]	*13*	**Minimum reinforced concrete penetration [*mm*]**	*1000*
total time of flight to maximum range [*s*]	*145*	**Maximum reinforced concrete [*mm*]**	*2000*
		number of fragments	*16000*

PACKING

Index of rocket container	*9Я616*	**Index of warhead container**	*9Я634*

DESCRIPTION

9M21Ф is designed to engage personnel, combat equipment, artillery and fortifications located in the tactical depth of the enemy defence. This rocket consists of warhead (1), rocket main motor (3), rocket launch motor (4) rocket rotary motor (2).

COLOR and MARKING

Body colour:	*Light grey*
Text colour:	*Black*

FUZE

Type	Characteristic
9Э29	*Fuze - electromechanical, secured with a mask safety, and magneto-electrical, reaction and inertia sensors with immediate effect.*

SAFETY CONSIDERATION THREAT

Do not touch and do not move unexploded rocket.

NOTICE

Rocket motor 9M21 is a common for all warheads type for 9K52 Luna-M.

DRAWINGS/CUTAWAY/MARKING/STENCILING		LEGEND
	WARHEAD 9H18Φ **ROTARY MOTOR** 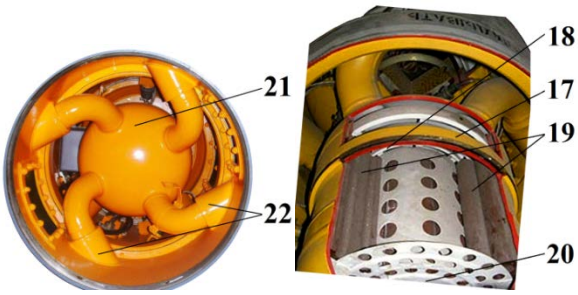 **MAIN AND LAUNCH MOTORS** 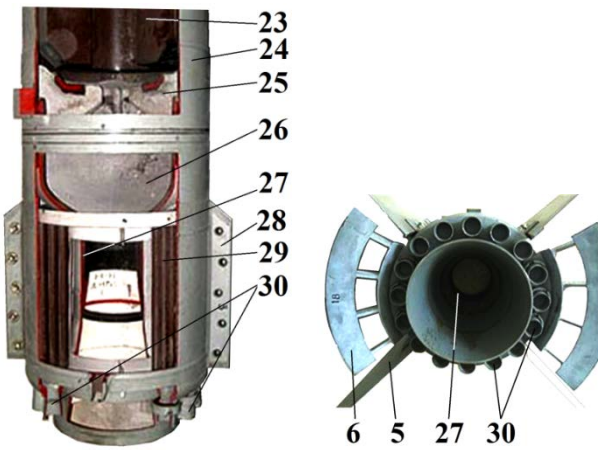	*1 - Warhead;* *2 - Spin motor;* *3 - Main motor;* *4 - Launch motor;* *5 - Stabilizing wings;* *6 - Braking segments;* *7 - Fuze - head crash sensor;* *8 - Ballistic cone and casing* *9 - Fuze - side crash sensors;* *10 - Connecting cable;* *11 - Shaped charge liner (cumulative insert);* *12 - Hollow charge;* *13 - Body of warhead;* *14 - Insert;* *15 - Booster charge;* *16 - Fuze - safety and initiation mechanism;* *17 - Combustion chamber of rotary motor;* *18 - Grid;* *19 - Solid propellant of rotary motor;* *20 - Igniter of rotary motor;* *21 - Bottom of rotary motor;* *22 - Nozzles of rotary motor;* *23 - Solid propellant of main motor;* *24 - Combustion chamber of main motor;* *25 - Grid;* *26 - Throat;* *27 - Case with nozzle of main motor;* *28 - Holders of stabilizing wings;* *29 - Solid propellant of launch motor;* *30 - Nozzles of launch motor;*

DRAWINGS/CUTAWAY/MARKING/STENCILING		LEGEND
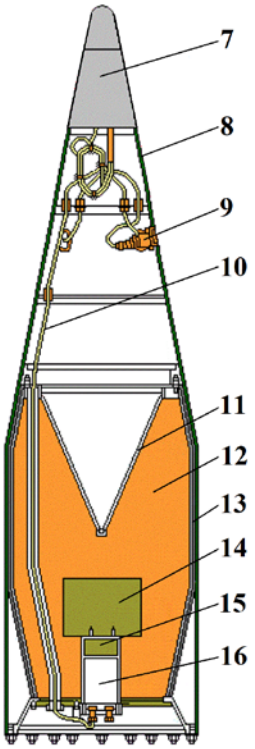	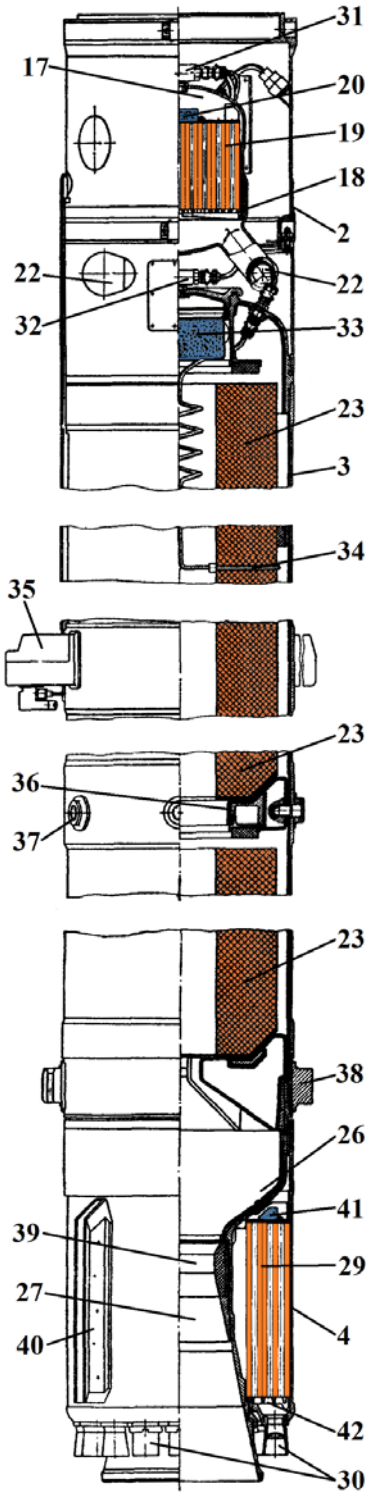	*31 - Delay primer of spin motor;* *32 - Primer of main motor;* *33 - Igniter of main motor;* *34 - Thermometer;* *35 - Guiding jaws;* *36 - Intermediate grid;* *37 - Connecting screws;* *38 - Guide pin;* *39 - Steerable nozzle of main motor;* *40 - Holders of stabilizing wings;* *41 - Igniter of launch motor;* *42 - Grid;* *43 - Centre of gravity of warhead;* *44 - Index of warhead;* *45 - Number of warhead;* *46 - Series and year of filled warhead and index filling factory;* *47 - Type of explosive;* *48 - Marking of upper part of warhead;* *49 - Graphic marking of upper part of warhead;* *50 - „A“ Index head, serial number, year of manufacture, marking of manufacturer, serial number of the body, the actual weight of the body, the explosive chamber volume in cm^3;* *51 - „Б“ Symbol of control;* *52 - “B” Symbol of inspection;* *53 - Number of sensor;* *54 - Index of sensor;* *55 - Index manufacturer of sensor;* *56 - Year of manufacture;* *57 - Series of manufacture;* *58 - Number of sensor;* *59 - Warning inscription: „ОСТОРОЖНО! НАГРУЗКУ НЕ ПРИКЛАДЫВАТЬ“ = „CAUTION! NO LOAD AREA“*
UPPER SIDE OF WARHEAD		
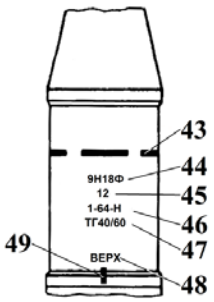		
LOWER SIDE OF WARHEAD		
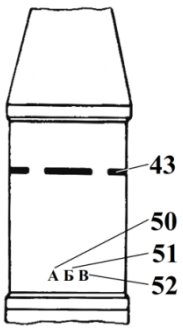		

DRAWINGS/CUTAWAY/MARKING/STENCILING

VIEW "D"

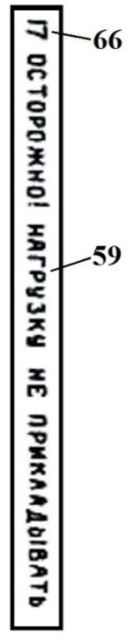

VIEW "C"

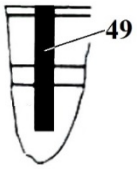

VIEW "E"

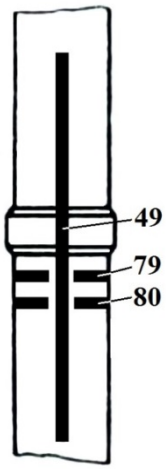

LEFT SIDE OF ROCKET

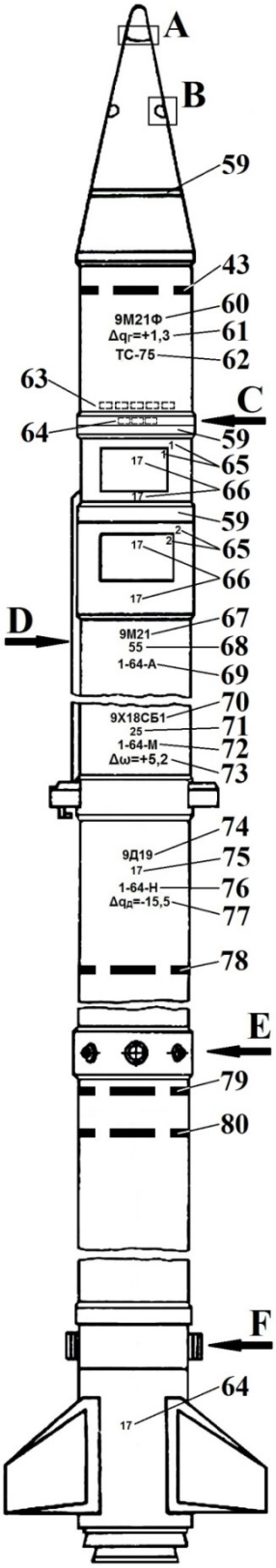

"A" - HEAD CRASH SENSOR

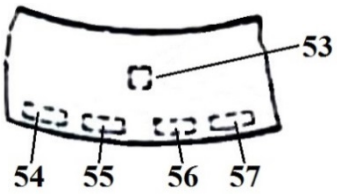

"B" - SIDE CRASH SENSOR

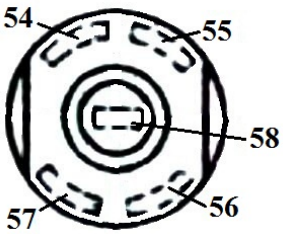

VIEW "F"

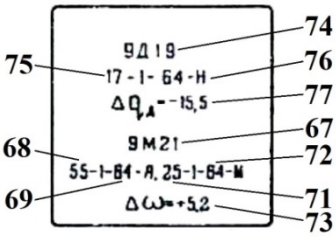

STABILISING WING

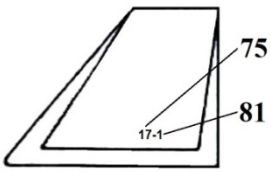

HOLDER OF STABILISING WING

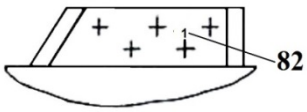

BRAKING SEGMENT

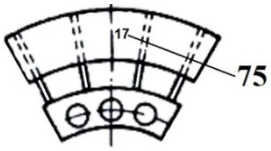

LEGEND

60 - Index of rocket;
61 - Deviation of the warhead weight;
62 - Number of shooting table;
63 - These sequentially:
- *index of safety and initiation mechanism;*
- *index of manufacturer;*
- *series and*
- *year of manufacture;*
- *number of safety and initiation mechanism;*

64 - These sequentially:
- *index of rocket;*
- *deviation of the warhead weight;*
- *number of shooting table;*

65 - Number of mounting hole;
66 - Number of rocket motor body;
67 - Index of filled rocket motor;
68 - Number of filled rocket motor;
69 - Series and year of rocket motor filling and index of filling factory;
70 - Index of solid propellant of main motor;
71 - Number of solid propellant of main motor;
72 - Series and year manufacture of solid propellant of main motor and index of manufacturer;
73 - Deviation of solid propellant weight of main motor;
74 - Index of main motor body;
75 - Number of main motor body;
76 - Series and year manufacture of main motor body and index of manufacturer;
77 - Deviation of body weight of main motor;
78 - Centre of gravity of rocket;
79 - Centre of gravity of filled rocket motor;
80 - Centre of gravity of rocket motor body;
81 - Number of stabilizing wing;
82 - Number of stabilizing wing holder

	FWP Ammunition	ANNEX B-22

FIELD of AMMUNITION	*Artillery rocket*
CALIBER	*544 mm*
NAME	*High Explosive Cluster Warhead Non - Guided Rocket*
TYPE	*HECW-Frag.*
NAME/ASSIGNED MARK (original)	*9M21K*
COUNTRY of ORIGIN	*Union of Soviet Socialist Republics*
DEPLOYMENT METHOD	*Fired by 9K52 Луна-M and modifications: 9K53 Луна-MB, Луна-3, 9K52TC Луна-TC*

ROCKET 9M21K

abbreviation	*9M21K*	**igniter weigh of main motor [*kg*]**	*3.85*
abbreviation of rocket motor	*9M21*	**igniter weigh of launch motor [*kg*]**	*0.87*
another name	*LUNA-M*	**igniter weigh of rotary motor [*kg*]**	*0.23*
NATO reporting name	*FROG-7A*	**maximum speed [$m.s^{-1}$]**	*1200*
weight of rocket [*kg*]	*2450 ± 1.5 %*	**index of warhead**	*9H18K*
length of rocket [*mm*]	*8960*	**weight of warhead [*kg*]**	*420*
range stabilization wings [*mm*]	*1700*	**type of explosive of central bursting charge**	*TNT*
maximum range (of fire) [*m*]	*68000*		
minimum range (of fire) [*m*]	*12000*	**weight of explosive of central bursting charge [*kg*]**	*2.37*
solid propellant (type НМФ-2Д) weight of main motor [*kg*]	*1090*	**index of safety and initiation mechanism**	*И-179*
solid propellant (type РСИ-60) weight of launch motor [*kg*]	*40*	**index of radio sensor**	*9Э320*
		index of submuniton	*9H22*
solid propellant weight of rotary motor [*kg*]	*13*	**number of pieces of submunitions**	*42*
		weight of submunition (1 pc) [*kg*]	*7.5*
total time of flight to maximum range [*s*]	*145*	**type of explosive in submunition**	*A-IX-1*
		weight of explosive in submunition [*kg*]	*1.69*
running time of main motor [*s*]	*6 - 12*	**index of submunition fuze**	*9Э237*
running time of launch motor [*s*]	*0.22 - 0.44*	**number of fragments of 1 pc 9H22**	*690*
running time of rotary motor [*s*]	*0.3 - 0.5*		

PACKING

Index of rocket container with stab. wings	*9Я616*	**Index of warhead container**	*9Я665*
Index of rocket container without stab. wings	*9Я662*		

DESCRIPTION

9M21K is used to against personnel in the open and non-armoured vehicles. This rocket consists of warhead; rocket main motor, rocket launch motor and rocket rotary motor are the same as for rocket 9M21Ф.

COLOR and MARKING

Body colour:	*Light gray*
Text colour:	*Black*

FUZE

Type	Characteristic
9Э237	*Fuze - head, impact, instantaneous with self - destruction.*

SAFETY CONSIDERATION THREAT

Do not touch and do not move unexploded rocket.

NOTICE

Rocket motor 9M21 is a common for all warheads types of the 9K52 Luna-M.

DRAWINGS/CUTAWAY/MARKING/STENCILING

WARHEAD 9H18K

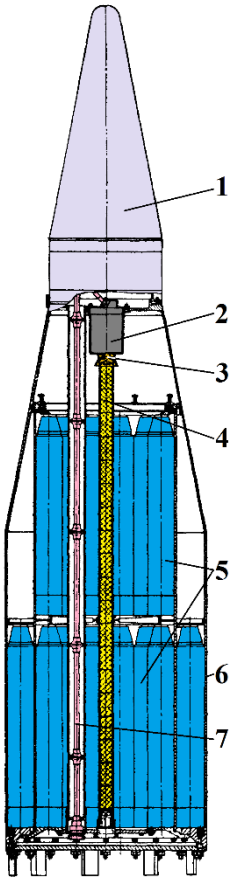

SUBMUNITON 9H22

IN CASSETTE WARHEAD

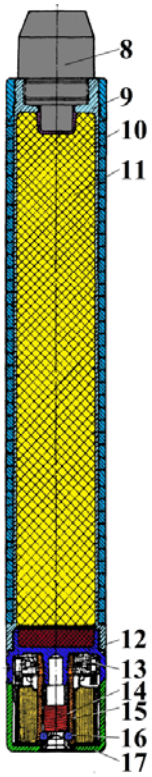

IN FLIGHT

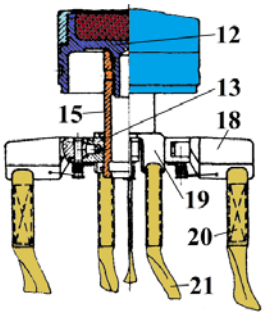

VIEW FROM THE LEFT

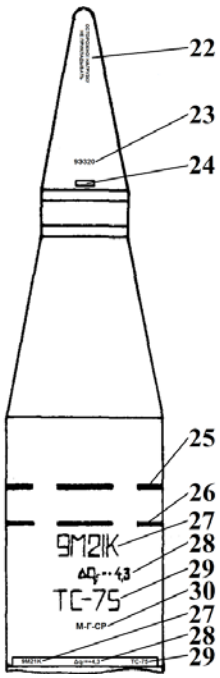

VIEW FROM THE RIGHT

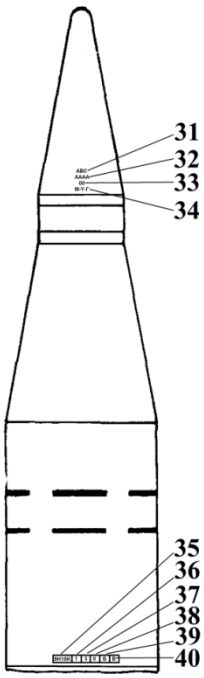

VIEW FROM TOP

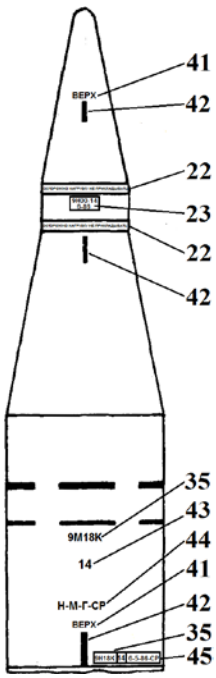

LEGEND

1 - Radio sensor 9Э320;
2 - Safety and initiation mechanism И-179;
3 - Booster charge;
4 - Central bursting charge;
5 - Submunition 9H22;
6 - Body; 7 - Cable of radio sensor; 8 - Fuze of submunition9Э237;
9 - Cylinder; 10 - Grooved steel tape; 11 - Bursting charge;
12 - Bottom; 13 - Star;
14 - Spring; 15 - Tube of stabilizer; 16 - Balls; 17 - Cup;
18 - Spring; 19 - Buckle;
20 - Strips of spring;
21 - Strips of buckle;
22 - Warning inscription: „ОСТОРОЖНО! НАГРУЗКУ НЕ ПРИКЛАДЫВАТЬ“ = „CAUTION! NO LOAD AREA “
23 - Index of radio sensor;
24 - Serial number of radio sensor; 25 - Centre of gravity of warhead in SP-5; 26 - Centre of gravity of warhead in SP-4;
27 - Index of rocket;
28 - Deviation of the warhead weight; 29 - Number of shooting table; 30 - Month - year of manufacture and index of manufacturer; 31 - Marking of body section 1; 32 - Index of body section 1; 33 - Serial number of body section 1;
34 - Series, year of manufacture; 35 - Index of warhead; 36 - Serial number of warhead body; 37 - Series of warhead body; 38 - Year of manufacture;
39 - Symbol of control;
40 - Symbol of inspection;
41 - Marking of upper part of warhead;
42 - Graphic marking of upper part of warhead;
43 - Serial number of warhead;
44 - Series - month - year of manufacture - index of manufacturer;
45 - Serial number of warhead/Series - month - year of manufacture - index of manufacturer;

	FWP Ammunition	**ANNEX B-23**

FIELD of AMMUNITION	*Artillery rocket*
CALIBER	*650 mm*
NAME	*High Explosive Semi - Guided Rocket*
TYPE	*HE-Frag.*
NAME/ASSIGNED MARK (original)	*9M79Ф*
COUNTRY of ORIGIN	*Union of Soviet Socialist Republics*
DEPLOYMENT METHOD	*Fired by 9K79 Точка (Tochka)*

ROCKET 9M79Ф		**ROCKET 9M79-1Ф**	
abbreviation	*9M79Ф*	**abbreviation**	*9M79-1Ф*
abbreviation of rocket motor	*9M79*	**abbreviation of rocket motor**	*9M79-1*
another name	*ТОЧКА*	**another name**	*ТОЧКА-У*
NATO reporting name	*SS-21 SCARAB A*	**NATO reporting name**	*SS-21 SCARAB B*
weight of rocket [*kg*]	*2010*	**weight of rocket [*kg*]**	*2010*
length of rocket [*mm*]	*6400*	**length of rocket [*mm*]**	*6410*
length of rocket motor [*mm*]	*4075*	**length of rocket motor [*mm*]**	*4085*
width of stabilization wings [*mm*]	*1440*	**width of stabilization wings [*mm*]**	*1440*
maximum range (of fire) [*km*]	*70*	**maximum range (of fire) [*km*]**	*120*
minimum range (of fire) [*km*]	*15*	**minimum range (of fire) [*km*]**	*20*
weight of rocket motor [*kg*]	*1518*	**weight of rocket motor [*kg*]**	*1528*
solid propellant weight of rocket motor with armour (17 kg) [*kg*]	*926*	**solid propellant weight of rocket motor with armour (17 kg) [*kg*]**	*1000*
running time of rocket motor [*s*]	*18.4 - 28*	**running time of rocket motor [*s*]**	*18.4 - 28*
total time of flight to range [*s*]	*43 - 163*	**total time of flight to range [*s*]**	*43 - 163*
maximum speed [$m.s^{-1}$]		**maximum speed [$m.s^{-1}$]**	*1036*
index of warhead	*9H123Ф*	**index of warhead**	*9H123Ф-1*
length of warhead [*mm*]	*2325*	**length of warhead [*mm*]**	*2325*
weight of warhead [*kg*]	*482*	**weight of warhead [*kg*]**	*480*
weight of explosive ТГ20 [*kg*]	*162.5*	**weight of explosive ТГ20 [*kg*]**	*162.5*
the number of fragments	*14500*	**the number of fragments**	*14500*
type of fuze	*9Э118*	**type of fuze**	*9Э118*

PACKING

Index of rocket container		**Index of warhead container**	

DESCRIPTION

9M79Ф or 9M79-1Ф is designed to engage personnel, combat equipment, artillery and fortifications located in the tactical depth of the enemy defence. This rocket consists of warhead (1), rocket motor (2).

COLOR and MARKING

Body colour:	*Green*
Text colour:	*Black and white*

FUZE

Type	**Characteristic**
9Э118	*Initiation of warhead consists of contactless fuze 9Э118, of safety and initiation mechanism 9Э117 and two contact sensors 9Э128. Contactless fuze, consisting of radio sensor and laser sensor.*

SAFETY CONSIDERATION THREAT

Do not touch and do not move unexploded rocket.

NOTICE

The rocket is guided while during the power stage of flight. The rocket starts at an angle 78°. Marking of solid propellant - type ДАП-15. The number of fragments - 20.6 g = 6000 pcs, 10 g = 4000 pcs, 5.47 g =4500 pcs.

DRAWINGS/CUTAWAY/MARKING/STENCILING		LEGEND
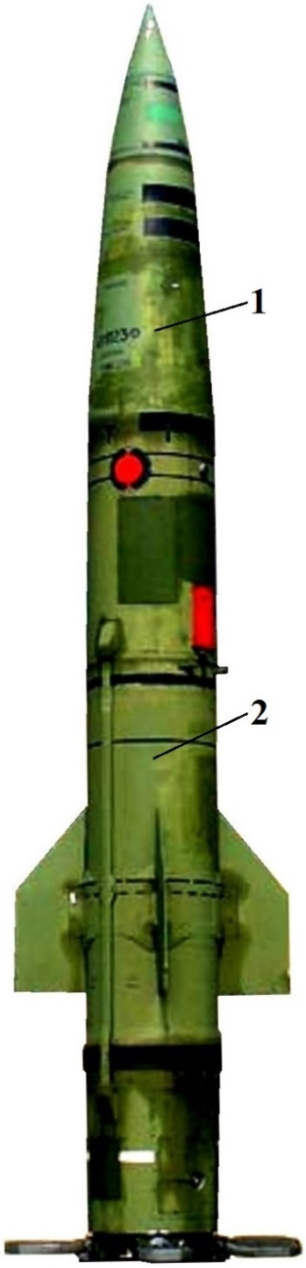	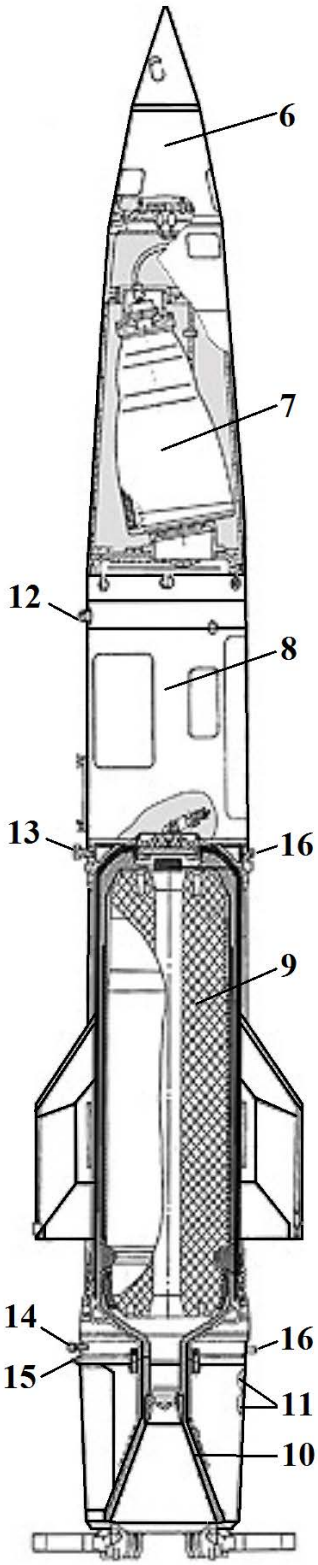	*1 - Warhead;* *2 - Rocket motor;* *3 - Stabilizing wings;* *4 - Aerodynamic rudder;* *5 - Gas rudder;* *6 - Fuze;* *7 - Body bursting charge;* *8 - Instrumental part;* *9 - Rocket motor;* *10 - Nozzle of rocket motor;* *11 - Covers of hydraulic connections;* *12 - Securing bracket;* *13 - Front guide pin;* *14 - Rear guide pin;* *15 - End switch;* *16 - Hanging bracket;*
STABILIZATION AND CONTROL PARTS		
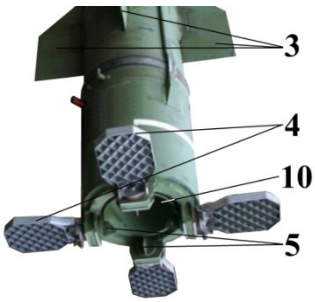		

DRAWINGS/CUTAWAY/MARKING/STENCILING		LEGEND
WARHEAD	**ROCKET MOTOR**	
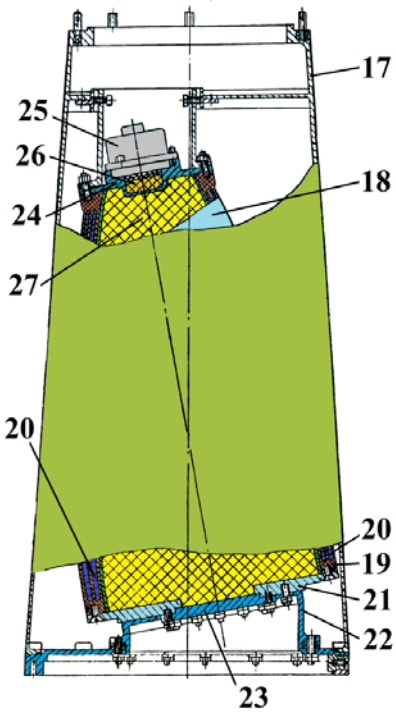	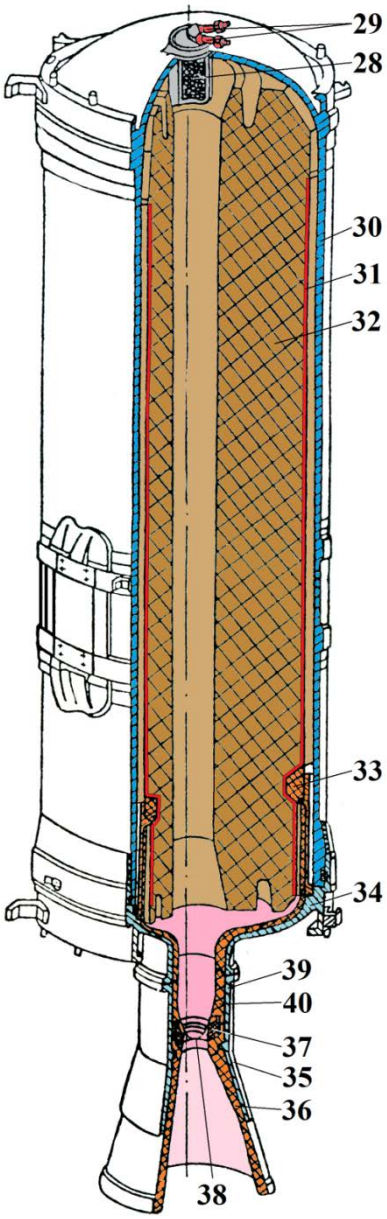	*17 - Body of warhead;* *18, 19 - Body bursting charge;* *20 - Fragments;* *21 - Cover;* *22 - Holder;* *23 - Cover;* *24 - Bottom;* *25 - Safety and initiation mechanism 9Э117;* *26 - Booster charge;* *27 - Bursting charge;* *28 - Igniter;* *29 - Pyrotechnic primers;* *30 - Body of rocket motor;* *31 - Propellant protector;* *32 - Propellant;* *33 - Holder;* *34 - Rear bottom;* *35 - Nozzle of rocket motor;* *36 - Nozzle cone;* *37 - Insert;* *38 - Plug;* *39 - Body of nozzle;* *40 - Case;* *41 - Cover;* *42 - Ring;* *43 - Casing;* *44 - Insert;* *45 - Igniter composition;* *46 - Sachet of black powder;* *47 - Black powder;* *48 - Tube;*
IGNITER OF ROCKET MOTOR		
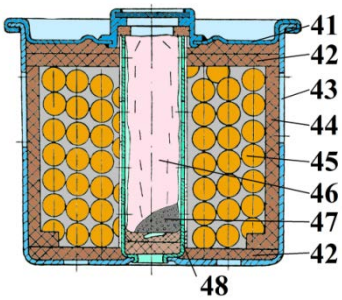		
VIEW "A"		
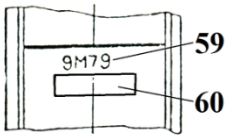		
VIEW "B"		
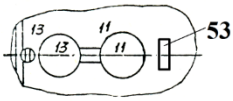		

DRAWINGS/CUTAWAY/MARKING/STENCILING			LEGEND
ROCKET MOTOR	**UPPER SIDE OF WARHEAD**	**VIEW "C"**	*49 - Fixing place;* *50 - Numbers of rocket motor covers;* *51 - Centre of gravity of assembled rocket;* *52 - Number of the volume of cables;* *53 - Agreed mark serial number of rocket motor;* *54 - Centre of gravity of assembled rocket motor;* *55 - Centre of gravity of non-assembled rocket motor;* *56 - Number of stabilizing wing;* *57 - Strips for orientation rocket on launcher;* *58 - Number of aerodynamic rudder;* *59 - Index of rocket motor;* *60 - Serial number of rocket motor;* *61 - Auxiliary marking of rocket motor;* *62 - Instructions for fold stabilizing wings;* *63 - Instructions to securing the stabilizing wings;* *64 - Fixing (manipulation) place;* *65 - Index of fuze;* *66 - Serial number of fuze;* *67, 68, 69 - Fixing (manipulation) place;* *70 - Graphic marking of upper part of warhead;* *71 - Marking of upper part of warhead;* *72 - Index of rocket;* *73 - Index of body assembled warhead;* *74 - Index of warhead;* *75 - Serial number of warhead;* *76 - Graphic marking of upper part of warhead;* *77 - Marking of upper part of warhead;* *78 - Fixing (manipulation) place;* *79 - Index and serial number of warhead body;* *80 - Index of rocket;* *81 - Index and serial number of warhead;* *82 - Centre of gravity of warhead;* *83 - Serial number of warhead body*
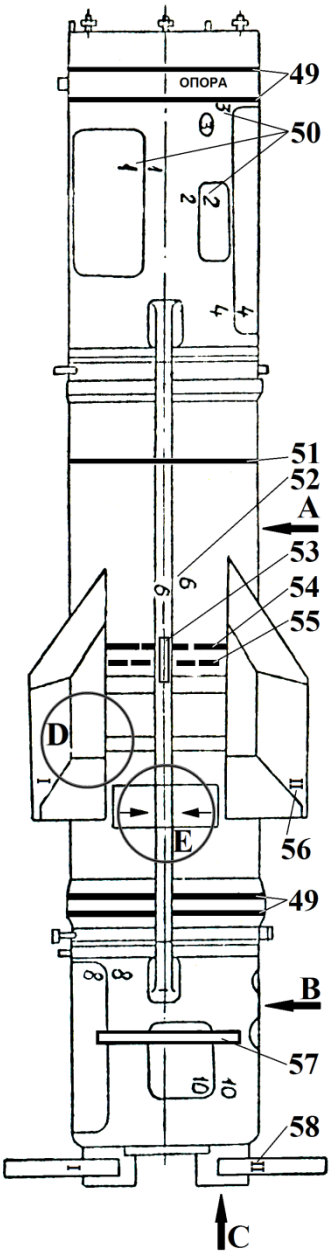	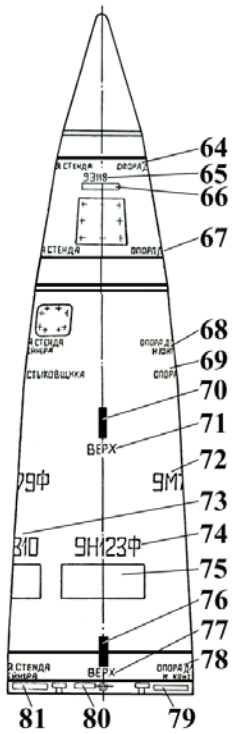	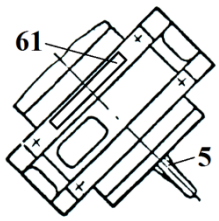	
	WARHEAD ROTATED BY 90°	**VIEW "D"**	
	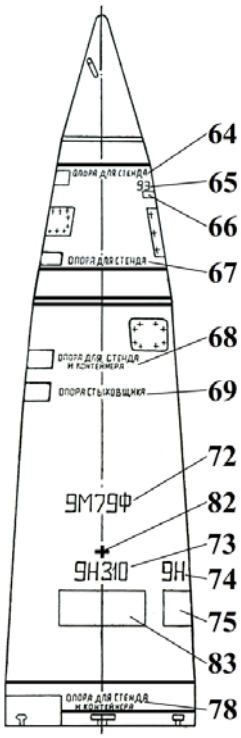	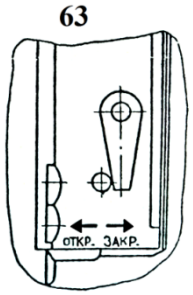	
		VIEW "E"	
		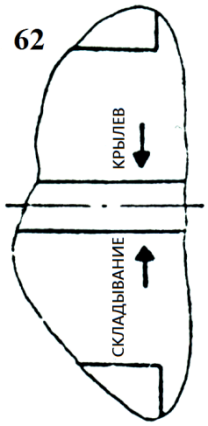	

	FWP Ammunition	ANNEX B-24

FIELD of AMMUNITION	*Artillery rocket*
CALIBER	*650 mm*
NAME	*High Explosive Cluster Warhead Semi - Guided Rocket*
TYPE	*HECW-Frag.*
NAME/ASSIGNED MARK (original)	*9M79K*
COUNTRY of ORIGIN	*Union of Soviet Socialist Republics*
DEPLOYMENT METHOD	*Fired by 9K79 Точка*

ROCKET 9M79K		ROCKET 9M79-1K	
abbreviation	*9M79K*	**abbreviation**	*9M79-1K*
abbreviation of rocket motor	*9M79*	**abbreviation of rocket motor**	*9M79-1*
another name	*ТОЧКА*	**another name**	*ТОЧКА-У*
NATO reporting name	*SS-21 SCARAB A*	**NATO reporting name**	*SS-21 SCARAB B*
weight of rocket [*kg*]	*2010*	**weight of rocket [*kg*]**	*2010*
length of rocket [*mm*]	*6400*	**length of rocket [*mm*]**	*6410*
length of rocket motor [*mm*]	*4075*	**length of rocket motor [*mm*]**	*4085*
width of stabilization wings [*mm*]	*1440*	**width of stabilization wings [*mm*]**	*1440*
maximum range (of fire) [*km*]	*70*	**maximum range (of fire) [*km*]**	*120*
minimum range (of fire) [*km*]	*15*	**minimum range (of fire) [*km*]**	*20*
weight of rocket motor [*kg*]	*1518*	**weight of rocket motor [*kg*]**	*1528*
solid propellant weight of rocket motor with armor (17 kg) [*kg*]	*926*	**solid propellant weight of rocket motor with armour (17 kg) [*kg*]**	*1000*
running time of rocket motor [*s*]	*18.4 - 28*	**running time of rocket motor [*s*]**	*18.4 - 28*
total time of flight to range [*s*]	*43 - 163*	**total time of flight to range [*s*]**	*43 - 163*
maximum speed [$m.s^{-1}$]		**maximum speed [$m.s^{-1}$]**	*1036*

CASSETTE WARHEAD 9H123K			
index of warhead	*9H123K*	**weight of submunition (1 pc) [*kg*]**	*7.45*
length of warhead [*mm*]	2325	**index of submunition fuze**	*9Э237*
weight of warhead [*kg*]	*482*	**type of explosive in submunition**	*A-IX-20*
index of radio sensor	*9Э326*	**weight of explosive in submunition [*kg*]**	*1.45*
index of safety and initiation mechanism	*9Э117*	**number of fragments of 1 pc 9H24**	*316*
index of submunition	*9H24*	**number of pieces of submunitions**	*50*

PACKING			
Index of rocket container	*9Я234*	**Index of warhead container**	*9Я236*

DESCRIPTION

9M79Ф or 9M79-1Ф is designed to engage personnel, combat equipment, artillery and fortifications located in the tactical depth of the enemy defence. This rocket consists of warhead (1), rocket motor (2).

COLOR and MARKING

Body colour:	*Green*
Text colour:	*Black and white*

FUZE

Type	Characteristic
9Э237	*Fuze - head, impact, instantaneous with self - destruction.*

SAFETY CONSIDERATION THREAT

Do not touch and do not move unexploded rocket.

NOTICE

Rocket motor 9M79 is a common for all warheads used on 9K79. The number of fragments - 7 g = 15800 pcs.

DRAWINGS/CUTAWAY/MARKING/STENCILING				LEGEND
WARHEAD 9H123K		SUBMUNITON 9H24		*1 - Radio sensor;* *2 - Body of warhead;* *3 - Safety and initiation mechanism 9Э117;* *4 - Electrical plug ;* *5 - Central bursting charge;* *6 - Submunition 9H24;* *7 - Cover;* *8 - Fuze of submunition9Э237;* *9 - Bursting charge;* *10 - Case;* *11 - Notched steel rings;* *12 - Index of submunition;* *13 - Bottom;* *14 - Insertion;* *15 - Tube of stabilizer;* *16 - Ribbon;* *17 - Stabilizer;* *18 - Spring;* *19 - Place for propping on stand;* *20 - Index of radio sensor;* *21 - Serial number of radio sensor;* *22 - Place for propping on stand and fixing (manipulation) place;* *23 - Graphic marking of upper part of warhead;* *24 - Marking of upper part of warhead;* *25 - Index of rocket;* *26 - Index of warhead body;* *27 - Index of warhead;* *28 - Serial number of warhead;* *29 - Index of warhead body and serial number of warhead body;* *30 - Index of rocket;* *31 - Index of warhead and serial number of warhead;* *32 - Warning inscription: „ОСТОРОЖНО! НАГРУЗКУ НЕ ПРИКЛАДЫВАТЬ“ = „CAUTION! NO LOAD AREA“* *33 - Centre of gravity of warhead;* *34 - Serial number of warhead body*
	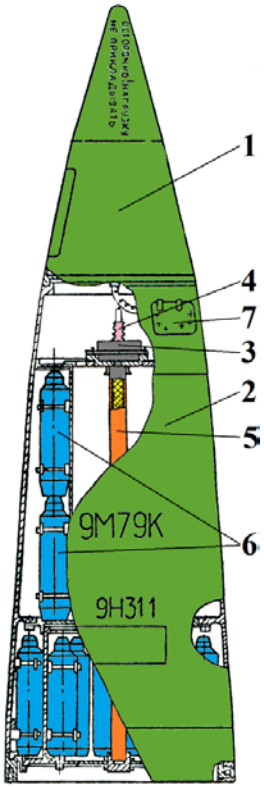	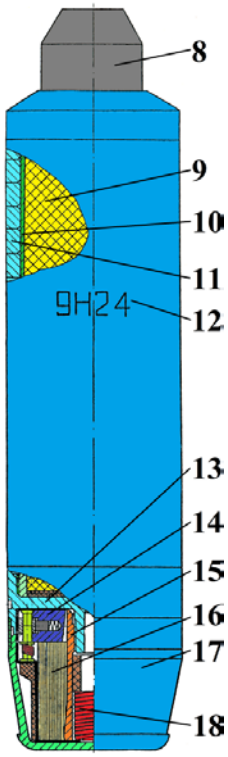		
VIEW FROM TOP	VIEW FROM THE LEFT	ТОЧКА	ТОЧКА-У	
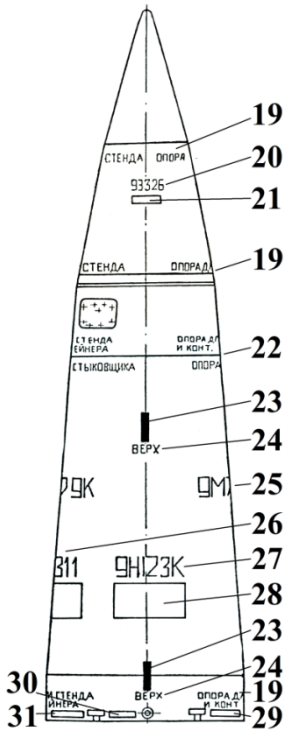		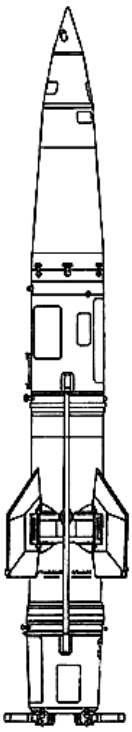	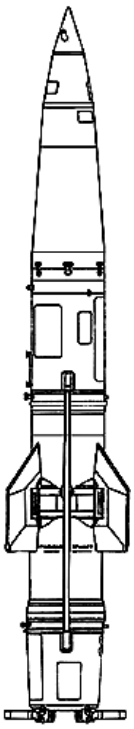	

Tittle:	Former Warsaw Pact Ammunition Handbook VOL2 Land Forces - Rockets and Missiles
Authors	**Colonel (ret) Milan GABRIŠ** Explosive Ordnance Disposal Centrum of Excellence **LTC (ret) Ján ŠTRBA**, **Ph.D.** Faculty of Special Technology Alexander Dubček University of Trenčín
Publisher	Explosive Ordnance Disposal Centrum of Excellence
Managing editor	mjr. Alexander Hugyar
Impression	150 pcs
Range	144 pages
Edition	First
Imprint date	July 2015
Stylistic revision	Mrs. Anna Farkašová, LTC (ret) Marián Mjartan

ISBN 978-80-89261-58-1
9 788089 261581